UNLESS OTHERWISE SPECIFIED:
DIMENSIONS ARE IN MILLIMETERS
WEIGHT ARE IN KILOGRAMM

	NAME	SIGNATURE	DATE
DRAWN	I.Agar		14.07.2023

Tiptiptap OÜ

Product code:

LM225-1

DESCRIPTION:

Play centre Hanna

A4

WEIGHT:

SCALE: 1:40

SHEET 1 OF 55

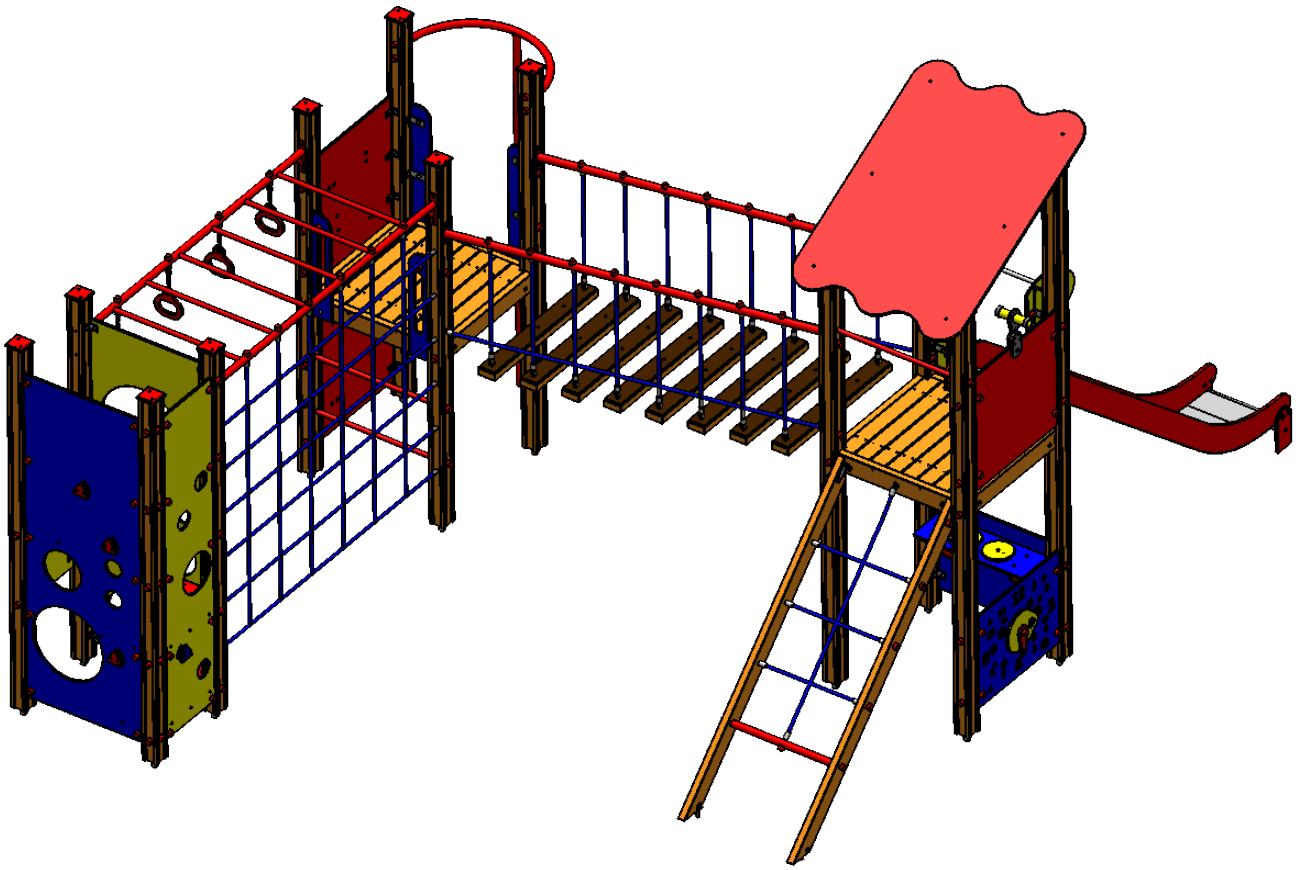

UNLESS OTHERWISE SPECIFIED:
DIMENSIONS ARE IN MILLIMETERS
WEIGHT ARE IN KILOGRAMM

	NAME	SIGNATURE	DATE
DRAWN	I.Agar		14.07.2023

Tiptiptap OÜ

Product code:

LM225-1

DESCRIPTION:

Play centre Hanna

A4

WEIGHT:

SCALE: 1:40

SHEET 2 OF 55

Safety area

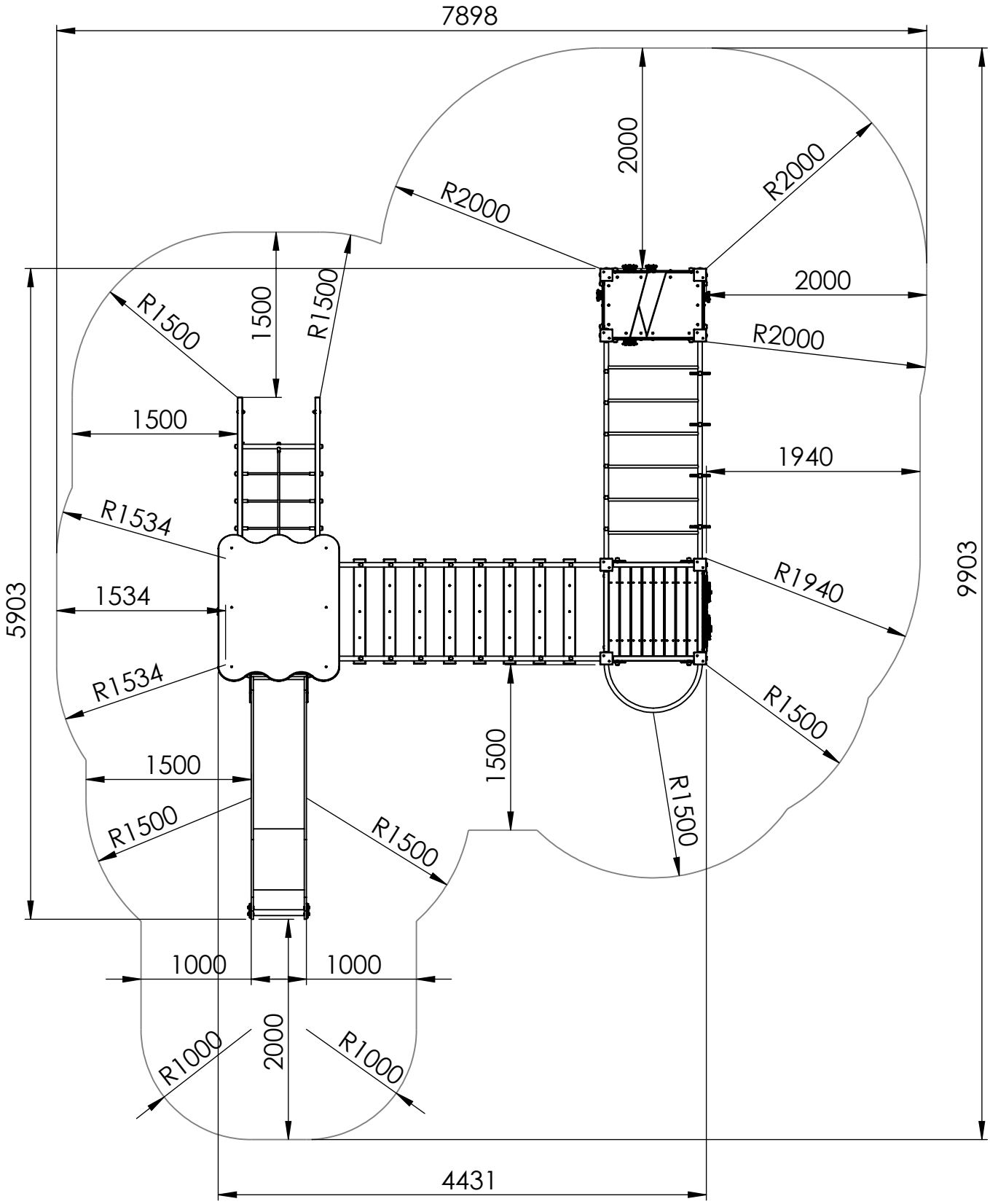

UNLESS OTHERWISE SPECIFIED: DIMENSIONS ARE IN MILLIMETERS WEIGHT ARE IN KILOGRAMM				Product code: LM225-1	
	NAME	SIGNATURE	DATE		
DRAWN	I.Agar		14.07.2023	DESCRIPTION: Play centre Hanna	
Tiptiptap OÜ					A4
				WEIGHT:	SCALE: 1:40	SHEET 2 OF 55

Foundation

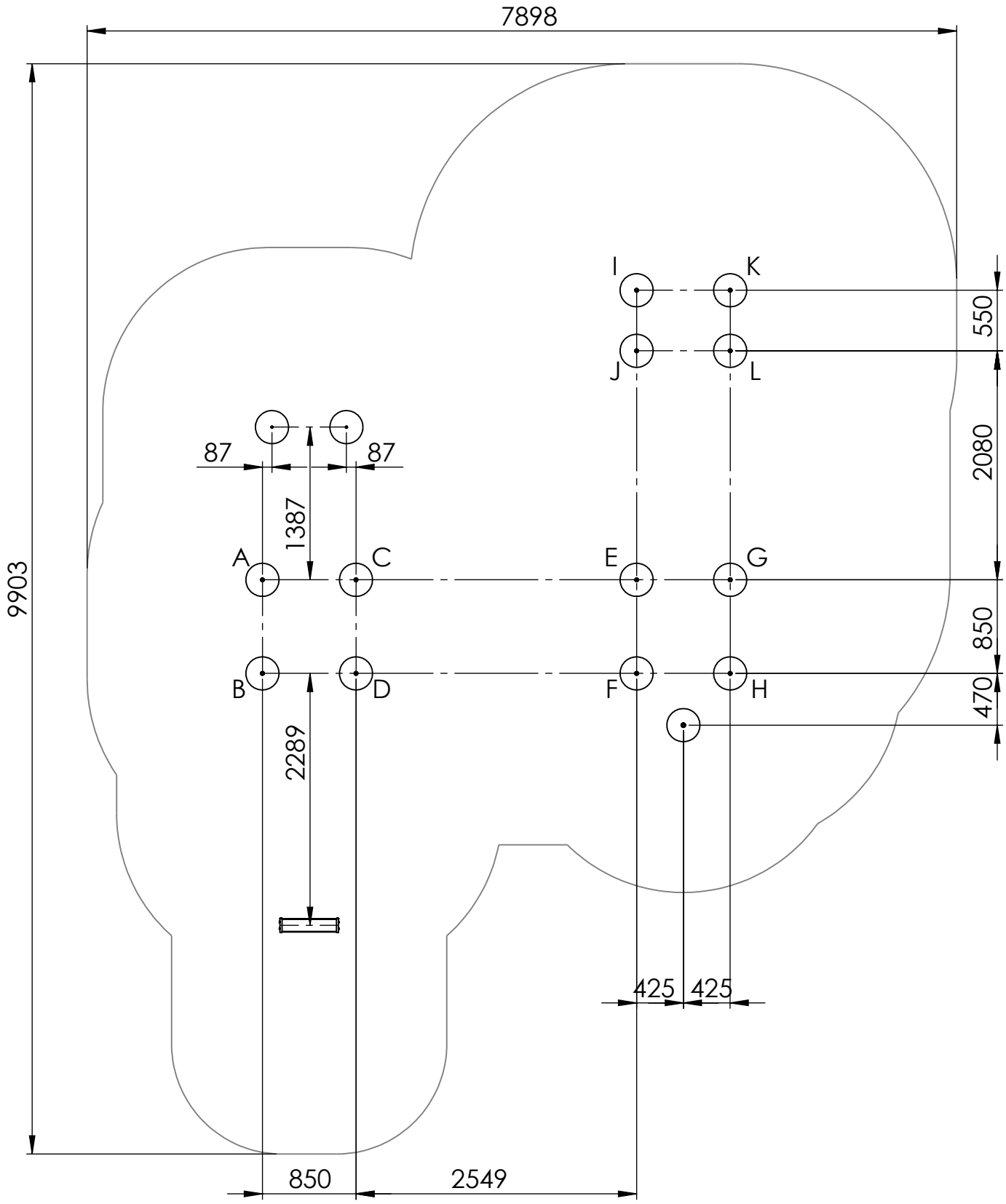

Depth of foundation: 600mm

UNLESS OTHERWISE SPECIFIED: DIMENSIONS ARE IN MILLIMETERS WEIGHT ARE IN KILOGRAMM				Product code: LM225-1	
	NAME	SIGNATURE	DATE		
DRAWN	I.Agar		14.07.2023	DESCRIPTION: Play centre Hanna	
Tiptiptap OÜ					A4
				WEIGHT:	SCALE: 1:50	SHEET 4 OF 55

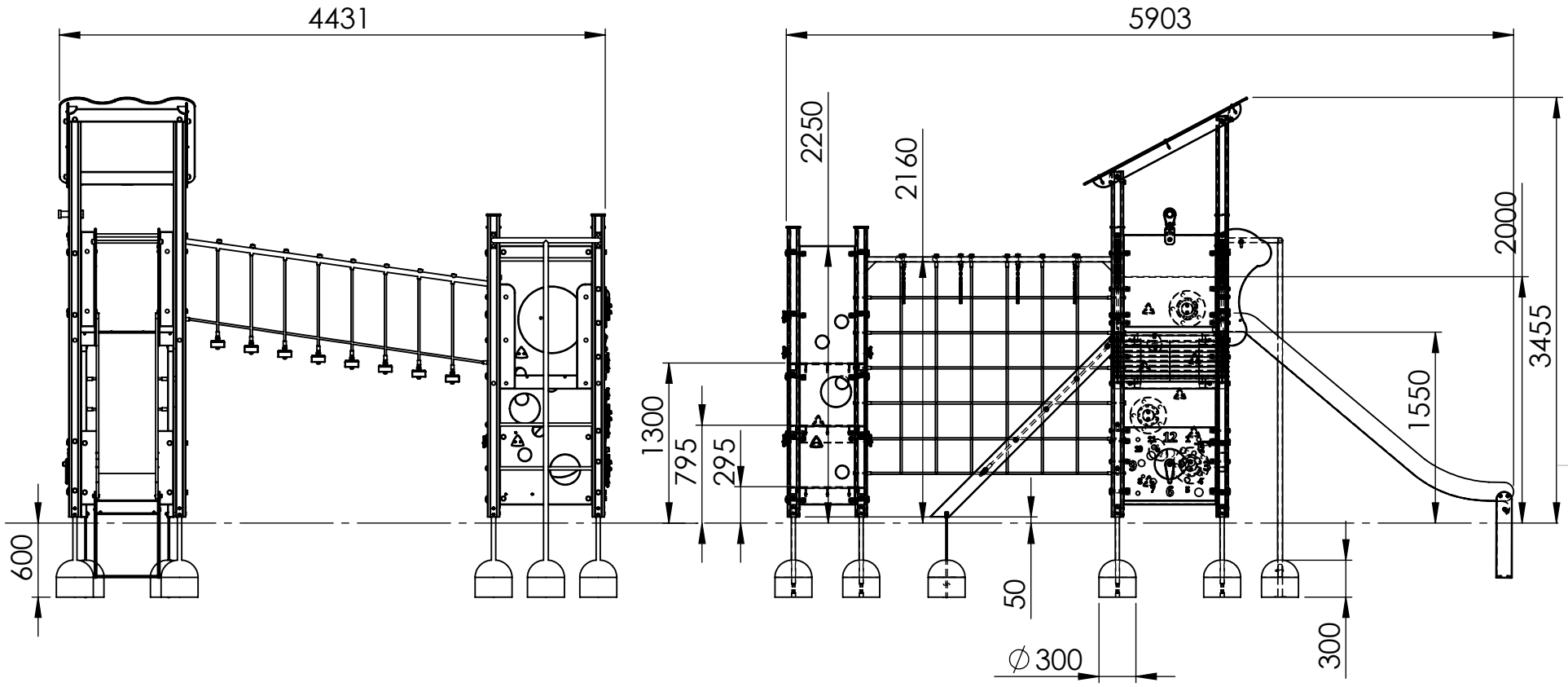

UNLESS OTHERWISE SPECIFIED:
DIMENSIONS ARE IN MILLIMETERS
WEIGHT ARE IN KILOGRAMM

	NAME	SIGNATURE	DATE
DRAWN	I.Agar		14.07.2023

Tiptiptap OÜ

Product code: LM225-1

DESCRIPTION: Play centre Hanna

A4

WEIGHT:

SCALE: 1:50

SHEET 5 OF 55

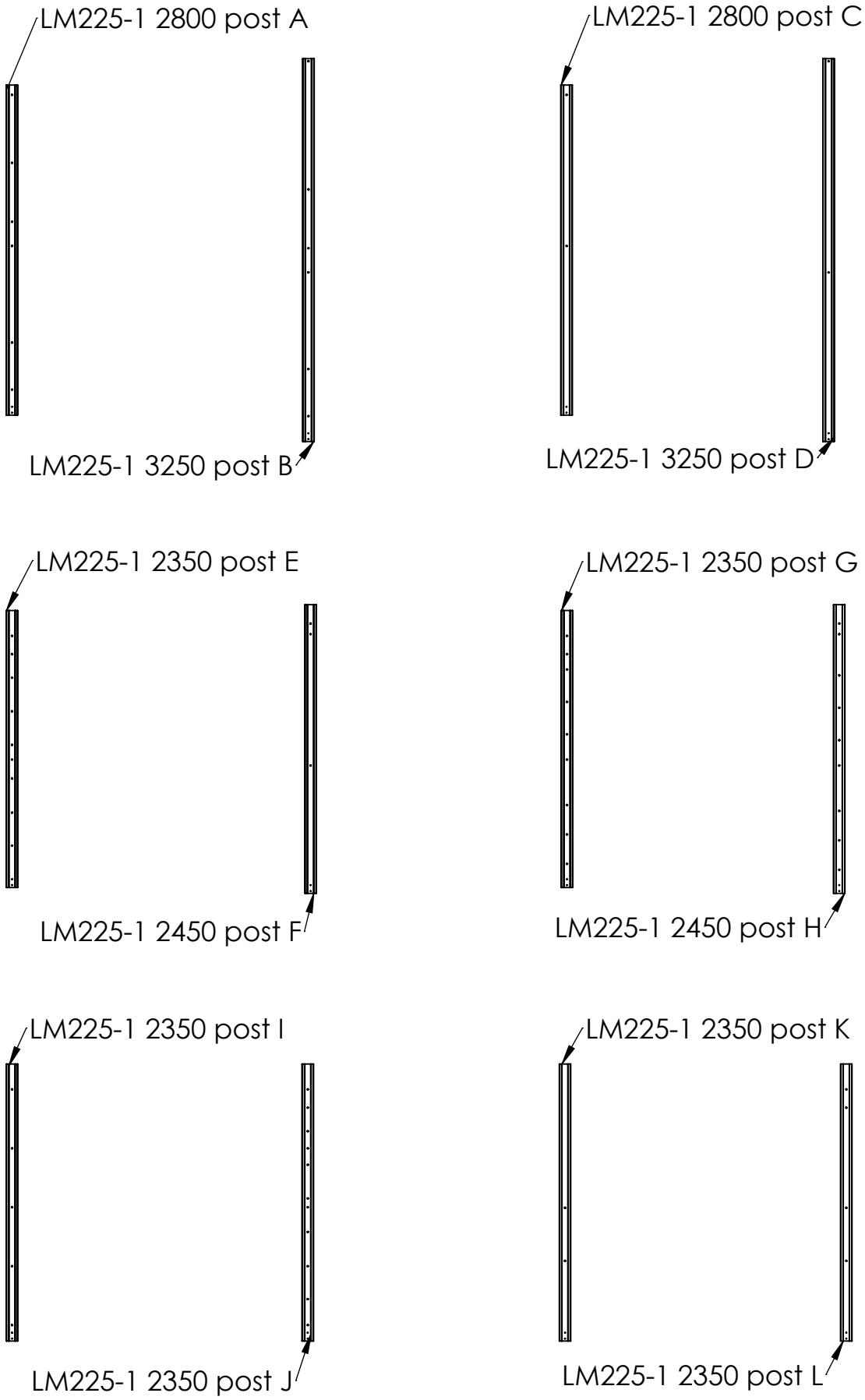

UNLESS OTHERWISE SPECIFIED:
DIMENSIONS ARE IN MILLIMETERS
WEIGHT ARE IN KILOGRAMM

	NAME	SIGNATURE	DATE
DRAWN	I.Agar		14.07.2023

Tiptiptap OÜ

Product code: LM225-1

DESCRIPTION: Play centre Hanna

A4

WEIGHT: | SCALE: 1:50 | SHEET 6 OF 55

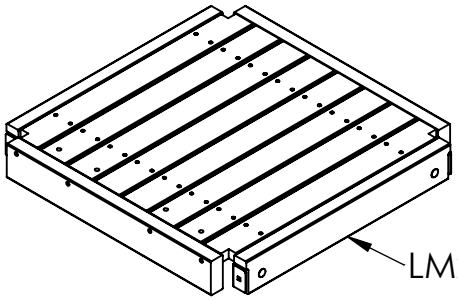

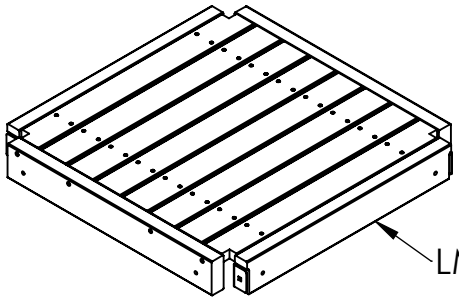

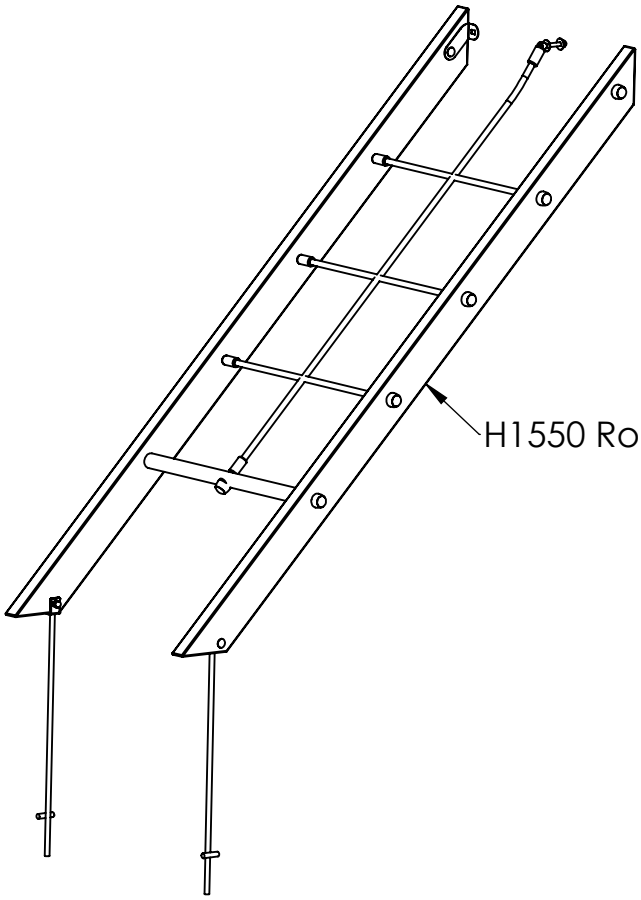

UNLESS OTHERWISE SPECIFIED:
DIMENSIONS ARE IN MILLIMETERS
WEIGHT ARE IN KILOGRAMM

	NAME	SIGNATURE	DATE
DRAWN	I.Agar		14.07.2023

Tiptiptap OÜ

Product code:

LM225-1

DESCRIPTION:

Play centre Hanna

A4

WEIGHT:

SCALE: 1:20

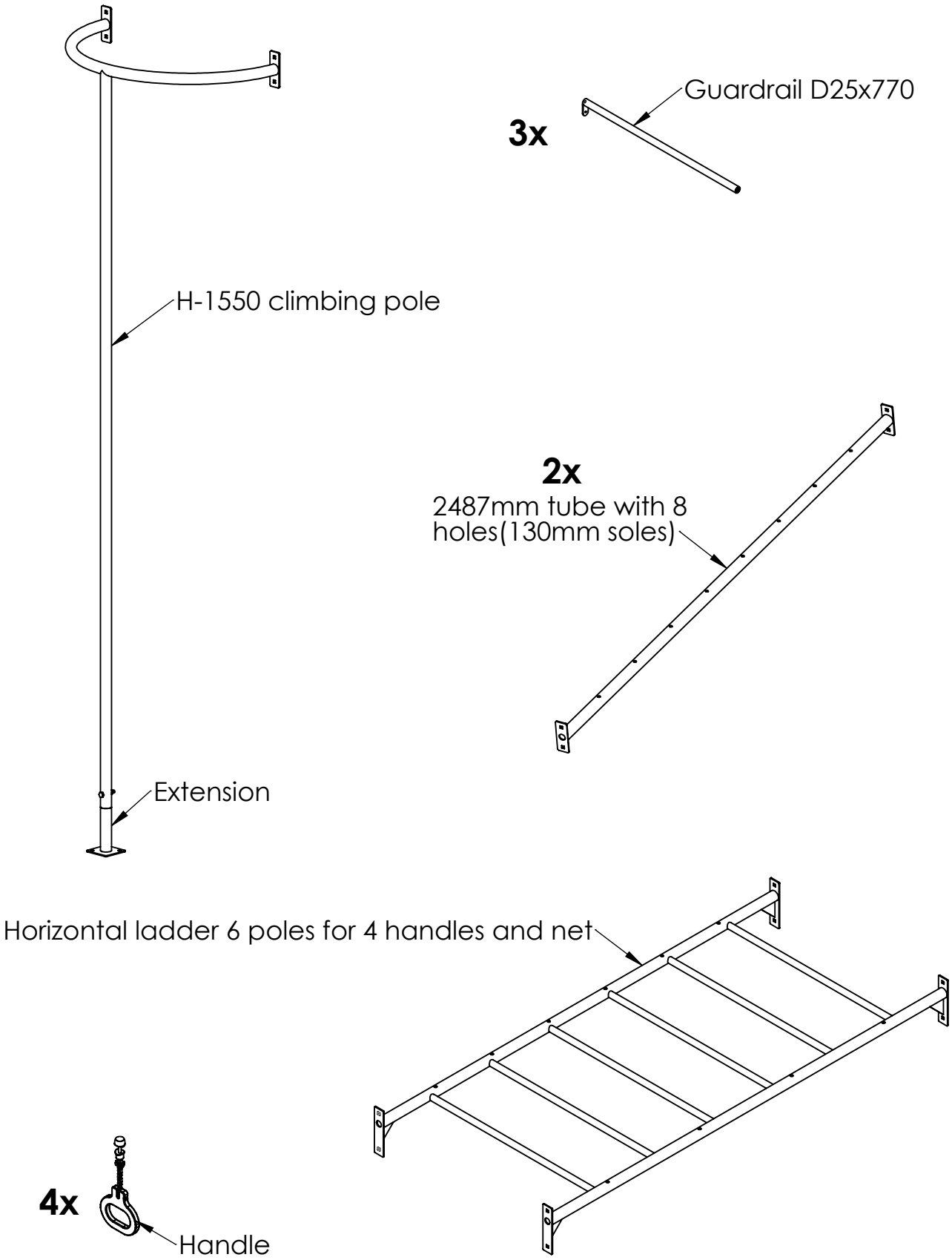

UNLESS OTHERWISE SPECIFIED:
DIMENSIONS ARE IN MILLIMETERS
WEIGHT ARE IN KILOGRAMM

	NAME	SIGNATURE	DATE
DRAWN	I.Agar		14.07.2023

Tiptiptap OÜ

Product code: LM225-1

DESCRIPTION: Play centre Hanna

A4

WEIGHT: | SCALE: 1:20 | SHEET 8 OF 55

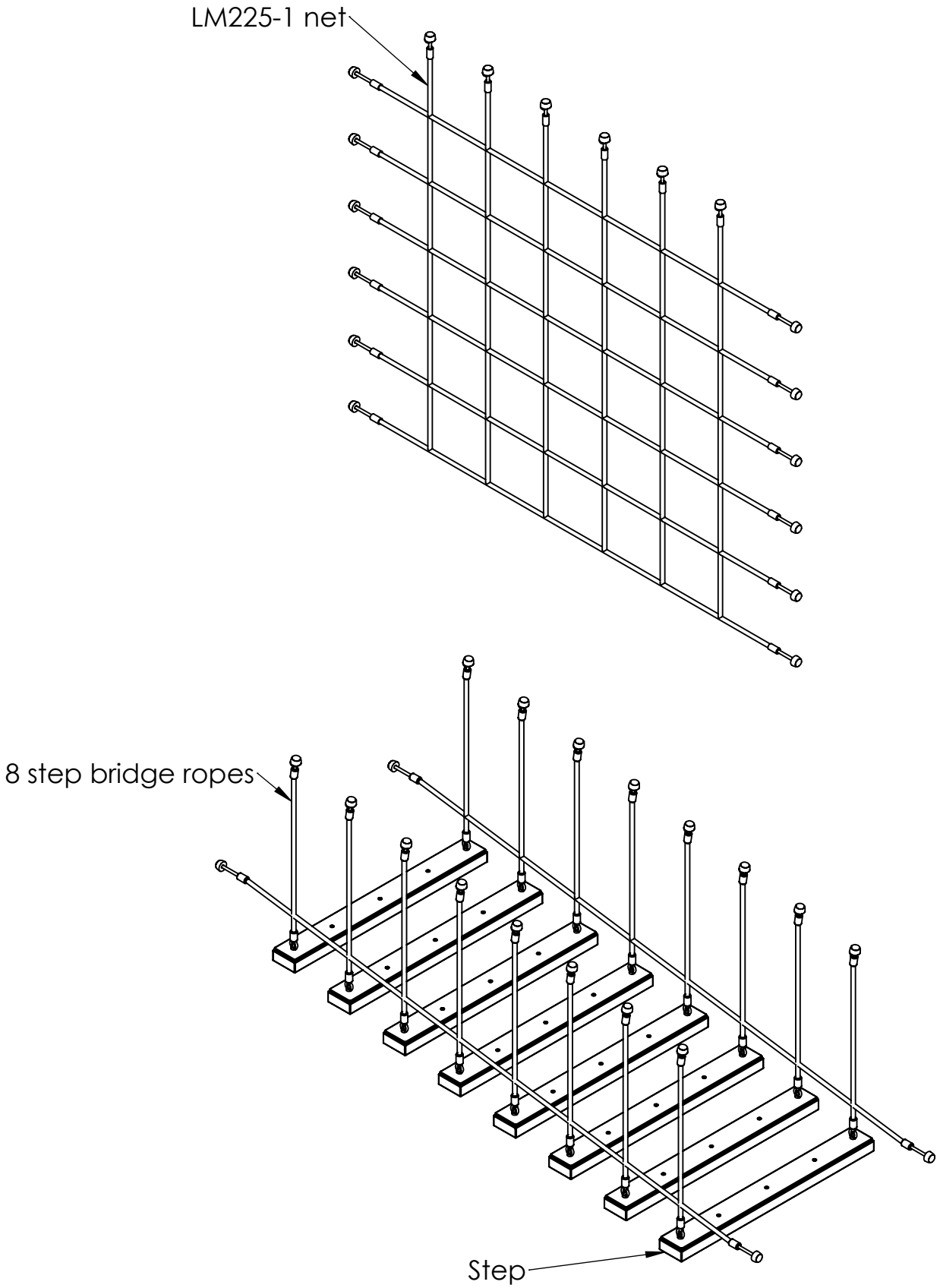

UNLESS OTHERWISE SPECIFIED:
DIMENSIONS ARE IN MILLIMETERS
WEIGHT ARE IN KILOGRAMM

	NAME	SIGNATURE	DATE
DRAWN	I.Agar		14.07.2023

Tiptiptap OÜ

Product code:
LM225-1

DESCRIPTION:
Play centre Hanna

A4

WEIGHT:

SCALE: 1:20

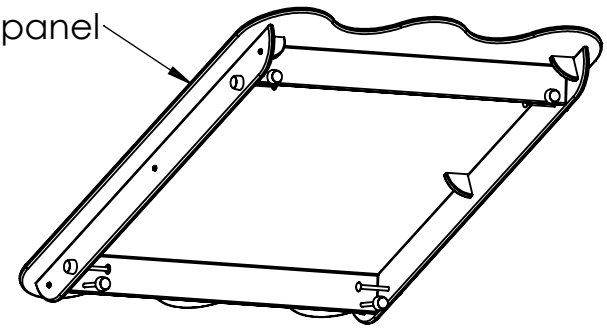

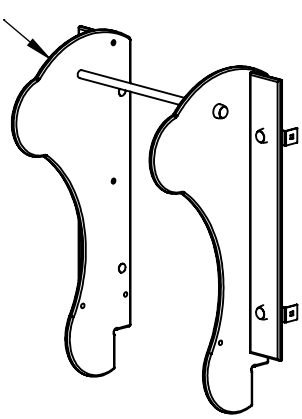

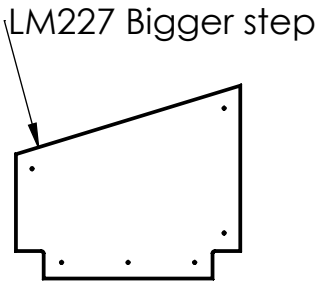

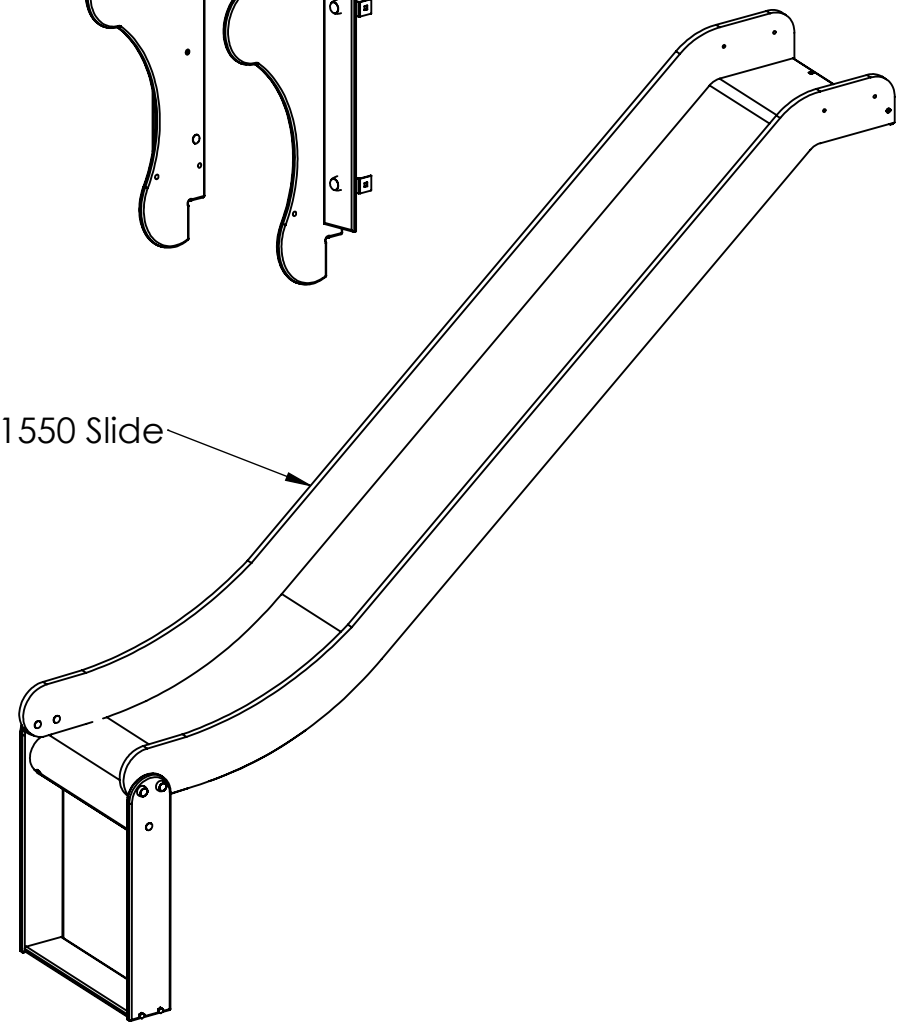

2x

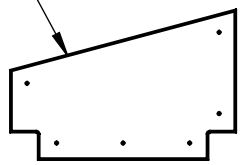

UNLESS OTHERWISE SPECIFIED:
DIMENSIONS ARE IN MILLIMETERS
WEIGHT ARE IN KILOGRAMM

	NAME	SIGNATURE	DATE
DRAWN	I.Agar		14.07.2023

Tiptiptap OÜ

Product code: LM225-1

DESCRIPTION: Play centre Hanna

A4

WEIGHT: | SCALE: 1:20 | SHEET 10 OF 55

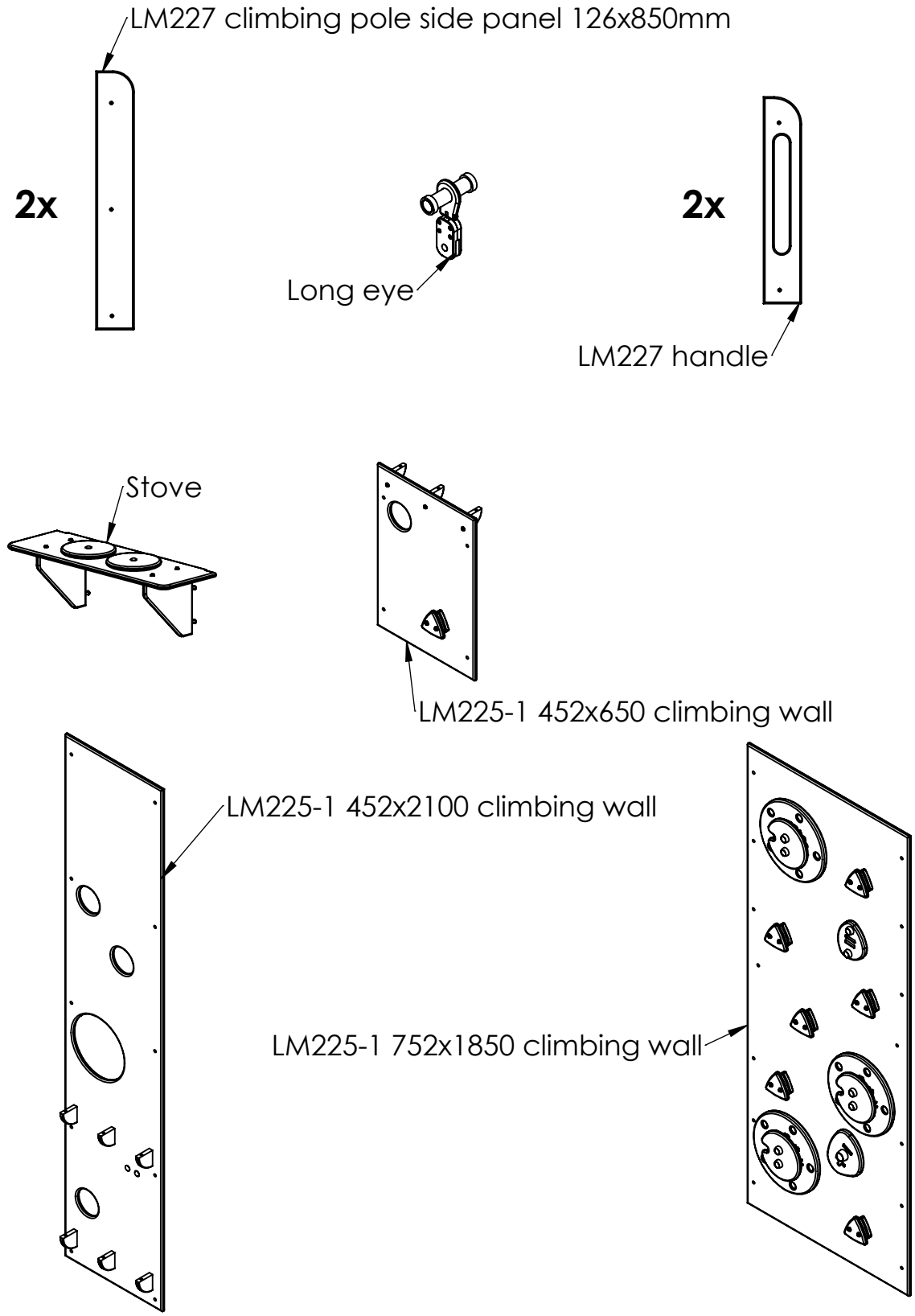

UNLESS OTHERWISE SPECIFIED:
DIMENSIONS ARE IN MILLIMETERS
WEIGHT ARE IN KILOGRAMM

	NAME	SIGNATURE	DATE
DRAWN	I.Agar		14.07.2023

Tiptiptap OÜ

Product code: LM225-1

DESCRIPTION: Play centre Hanna

A4

WEIGHT: | SCALE: 1:20 | SHEET 11 OF 55

LM225-1 752x2100 climbing wall 1

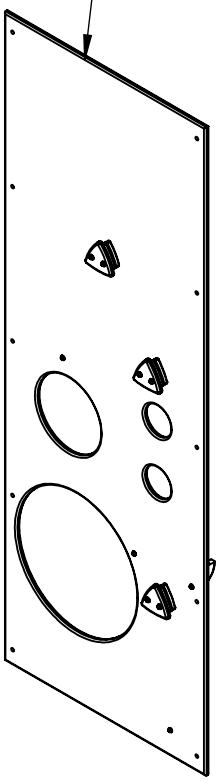

LM225-1 752x2100 climbing wall 2

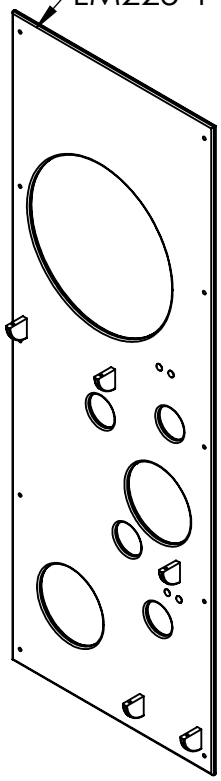

Playground retangle panel, lower hole 85mm with clock

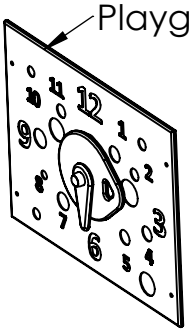

Playground retangle panel with stove, lower hole 100mm

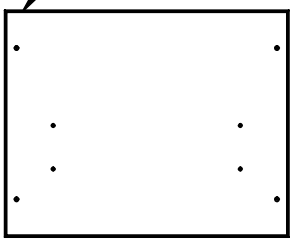

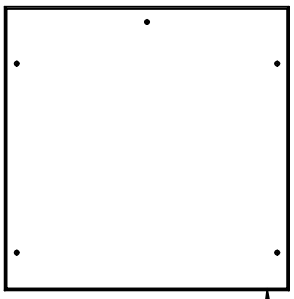

Playground retangle panel 750x752mm with binoculars, lower hole 100mm

UNLESS OTHERWISE SPECIFIED: DIMENSIONS ARE IN MILLIMETERS WEIGHT ARE IN KILOGRAMM			
	NAME	SIGNATURE	DATE
DRAWN	I.Agar		14.07.2023
Tiptiptap OÜ			

Product code:

LM225-1

DESCRIPTION:

Play centre Hanna

A4

WEIGHT:

SCALE: 1:20

SHEET 12 OF 55

Aluminium profile post gap and tube groundfixing assembly

Step 1

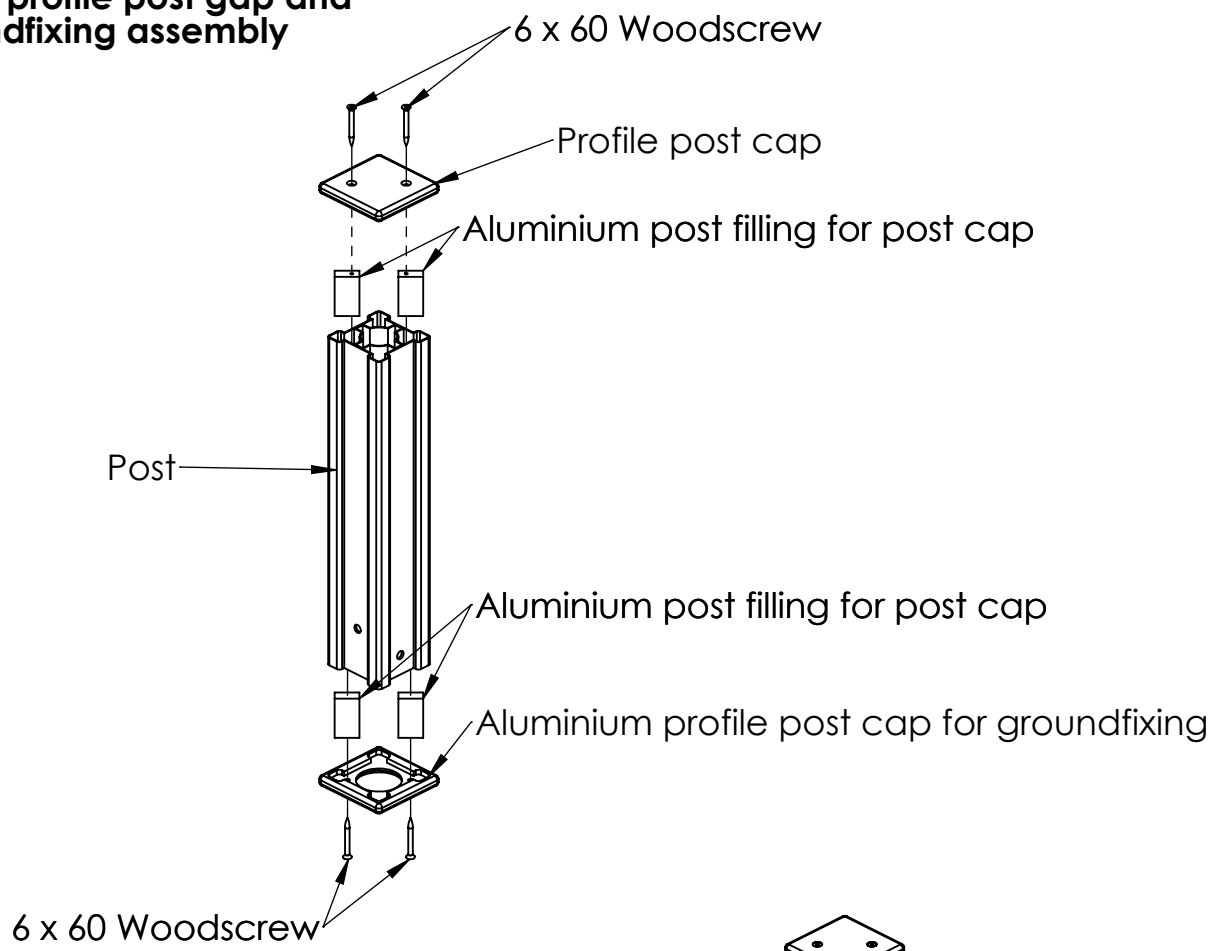

Step 2

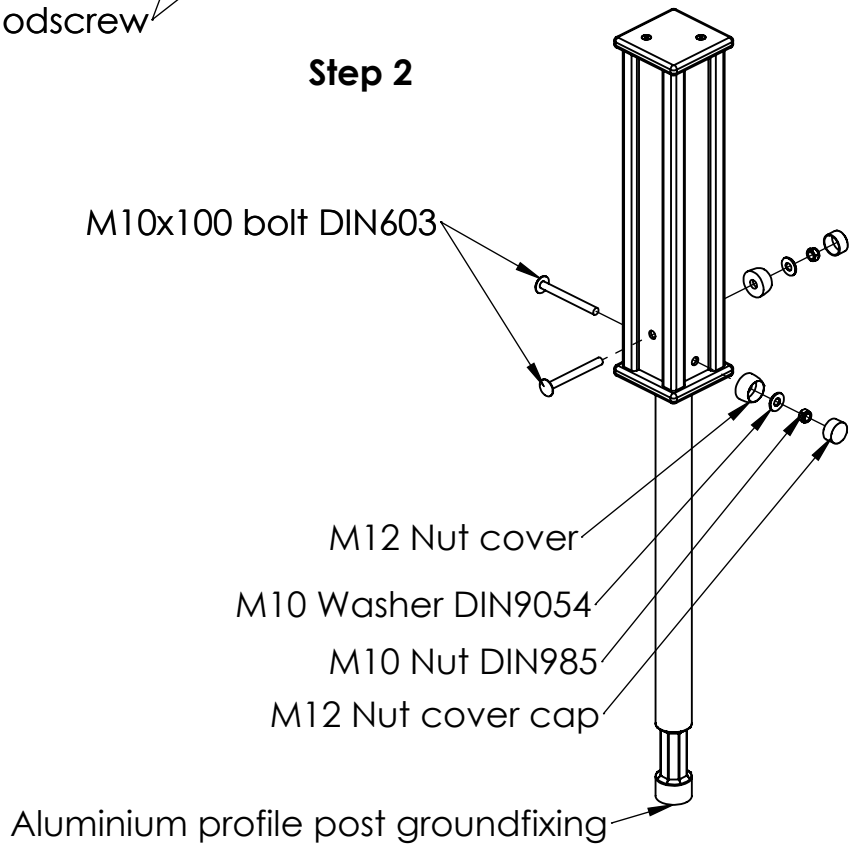

UNLESS OTHERWISE SPECIFIED: DIMENSIONS ARE IN MILLIMETERS WEIGHT ARE IN KILOGRAMM			
	NAME	SIGNATURE	DATE
DRAWN	I.Agar		14.07.2023
Tiptiptap OÜ			

Product code: LM225-1

DESCRIPTION: Play centre Hanna

A4

WEIGHT: | SCALE: 1:10 | SHEET 13 OF 55

Wood profile post gap and groundfixing assembly

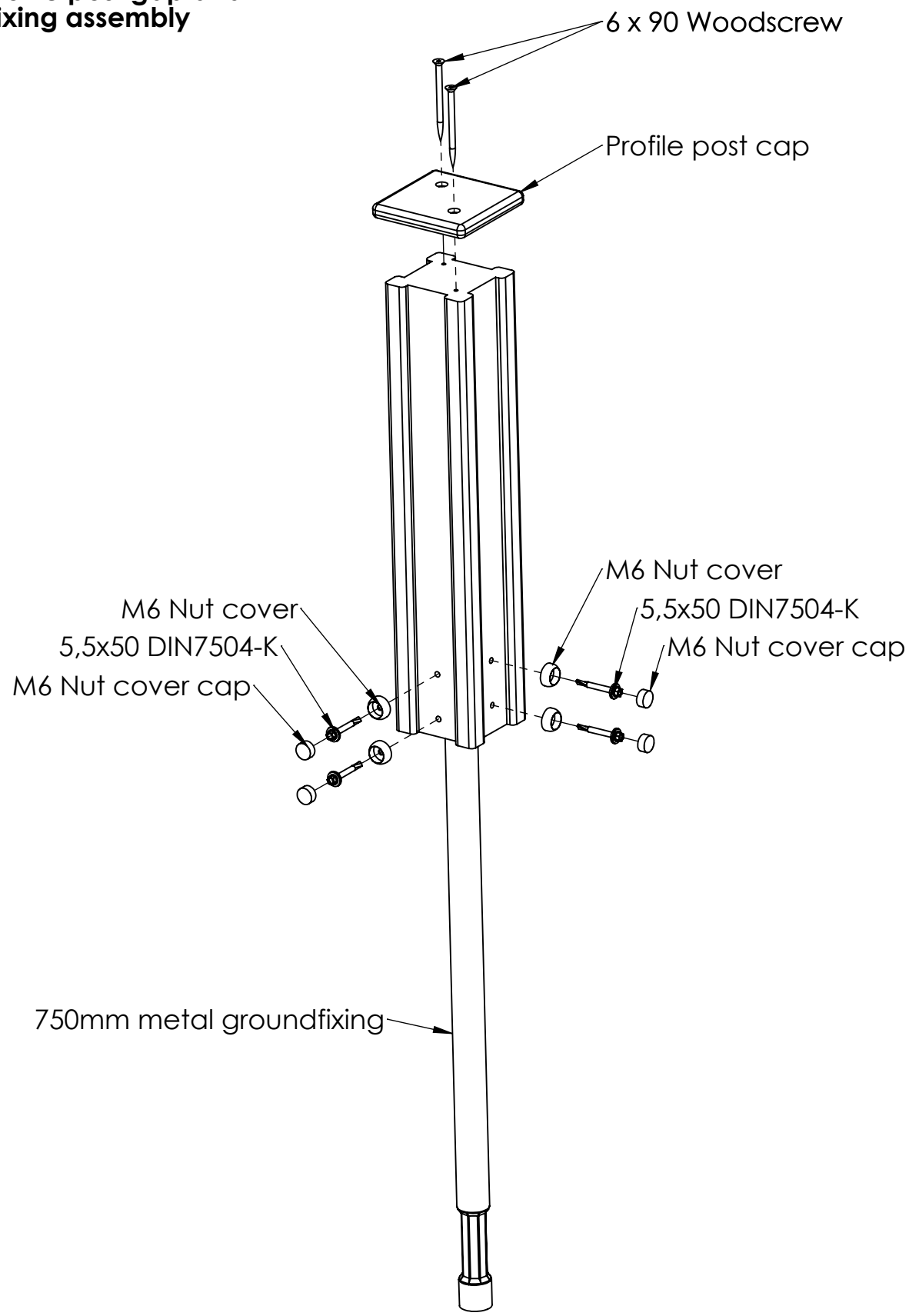

UNLESS OTHERWISE SPECIFIED:
DIMENSIONS ARE IN MILLIMETERS
WEIGHT ARE IN KILOGRAMM

	NAME	SIGNATURE	DATE
DRAWN	I.Agar		14.07.2023

Tiptiptap OÜ

Product code: LM225-1

DESCRIPTION: Play centre Hanna

A4

WEIGHT: | SCALE: 1:6 | SHEET 14 OF 55

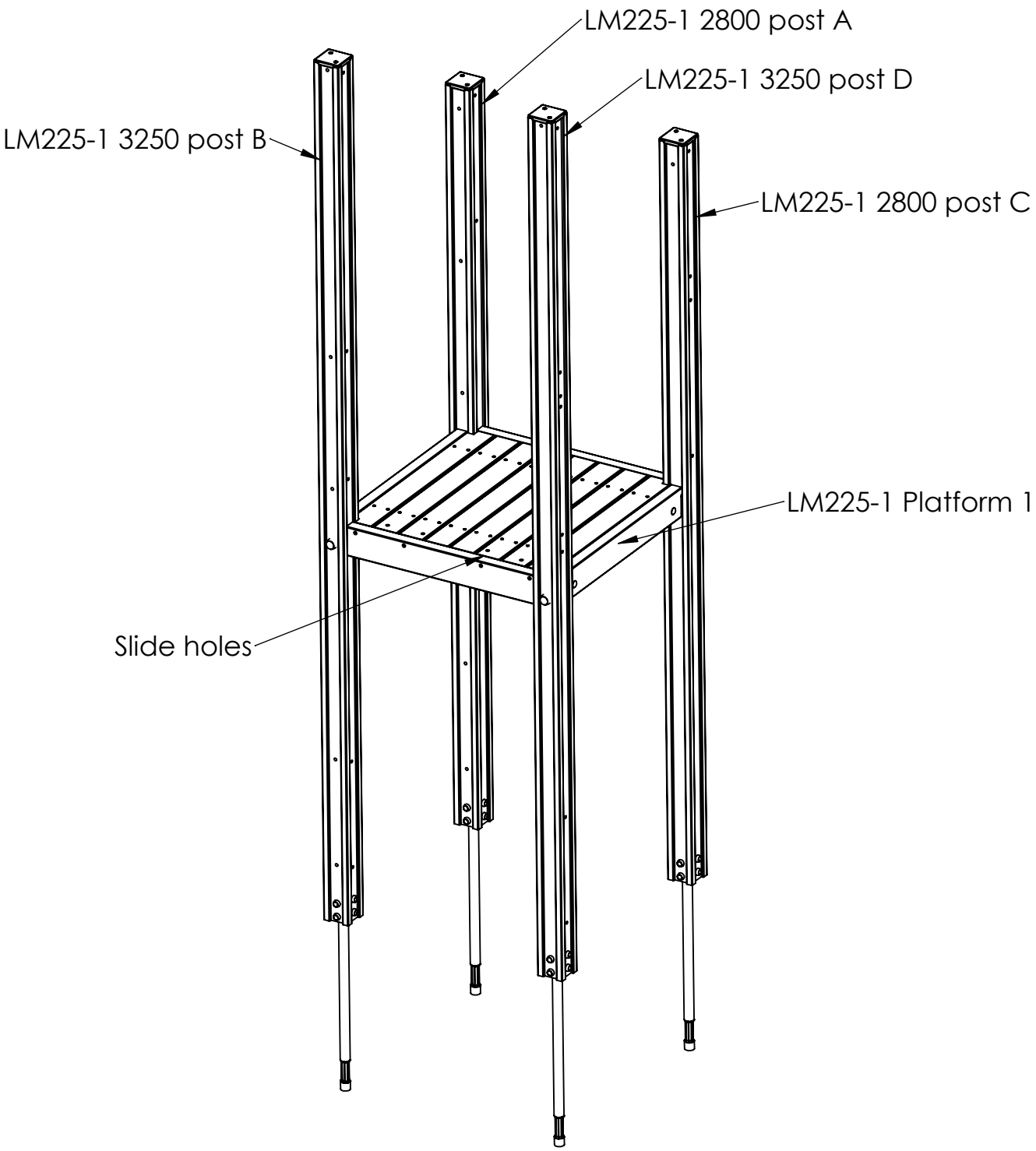

UNLESS OTHERWISE SPECIFIED:
DIMENSIONS ARE IN MILLIMETERS
WEIGHT ARE IN KILOGRAMM

	NAME	SIGNATURE	DATE
DRAWN	I.Agar		14.07.2023

Tiptiptap OÜ

Product code:
LM225-1

DESCRIPTION:
Play centre Hanna

A4

WEIGHT:

SCALE: 1:20

Platform to post assembly

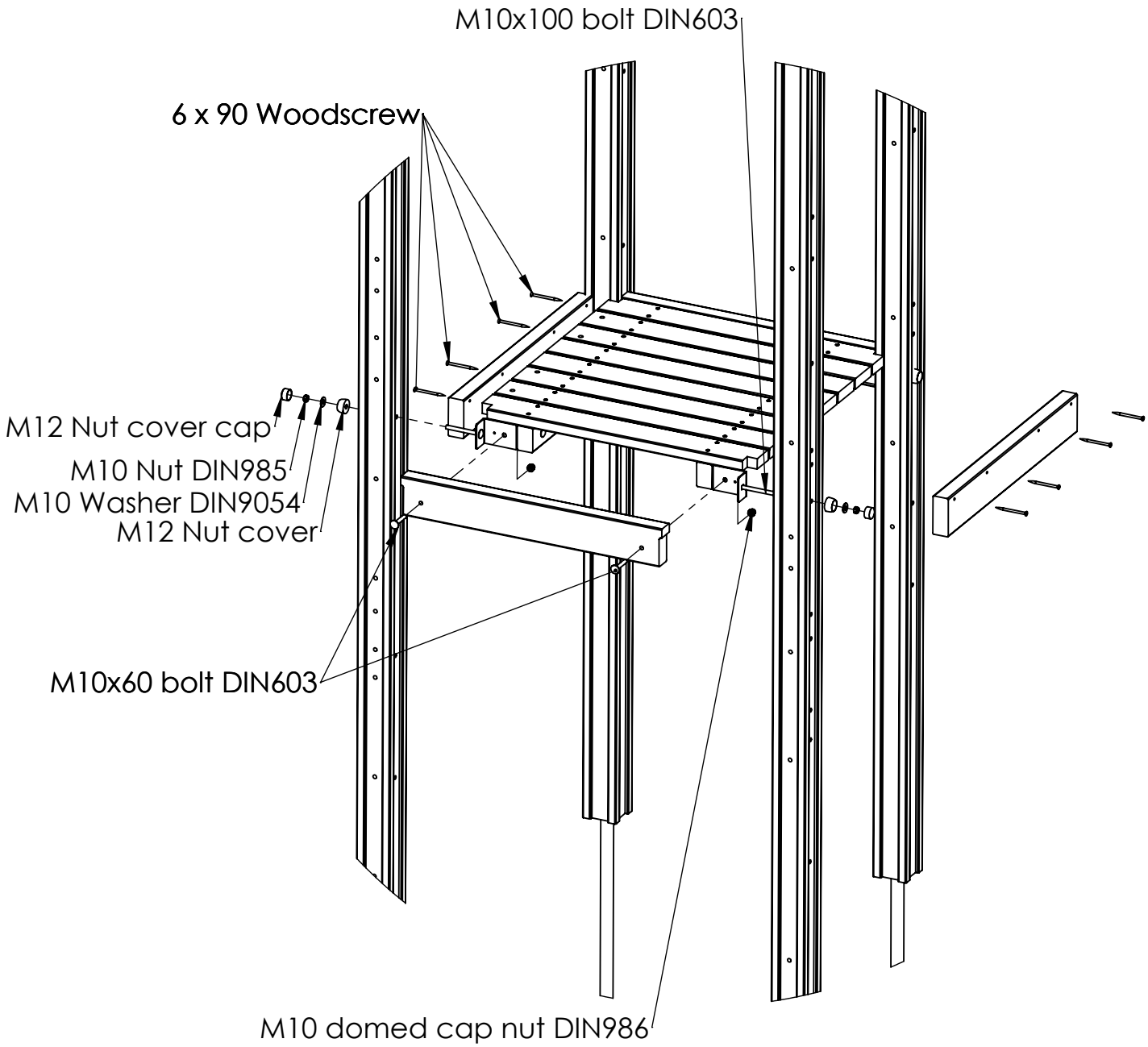

UNLESS OTHERWISE SPECIFIED: DIMENSIONS ARE IN MILLIMETERS WEIGHT ARE IN KILOGRAMM			
	NAME	SIGNATURE	DATE
DRAWN	I.Agar		14.07.2023
Tiptiptap OÜ			

Product code: LM225-1

DESCRIPTION: Play centre Hanna

A4

WEIGHT: | SCALE: 1:50 | SHEET 16 OF 55

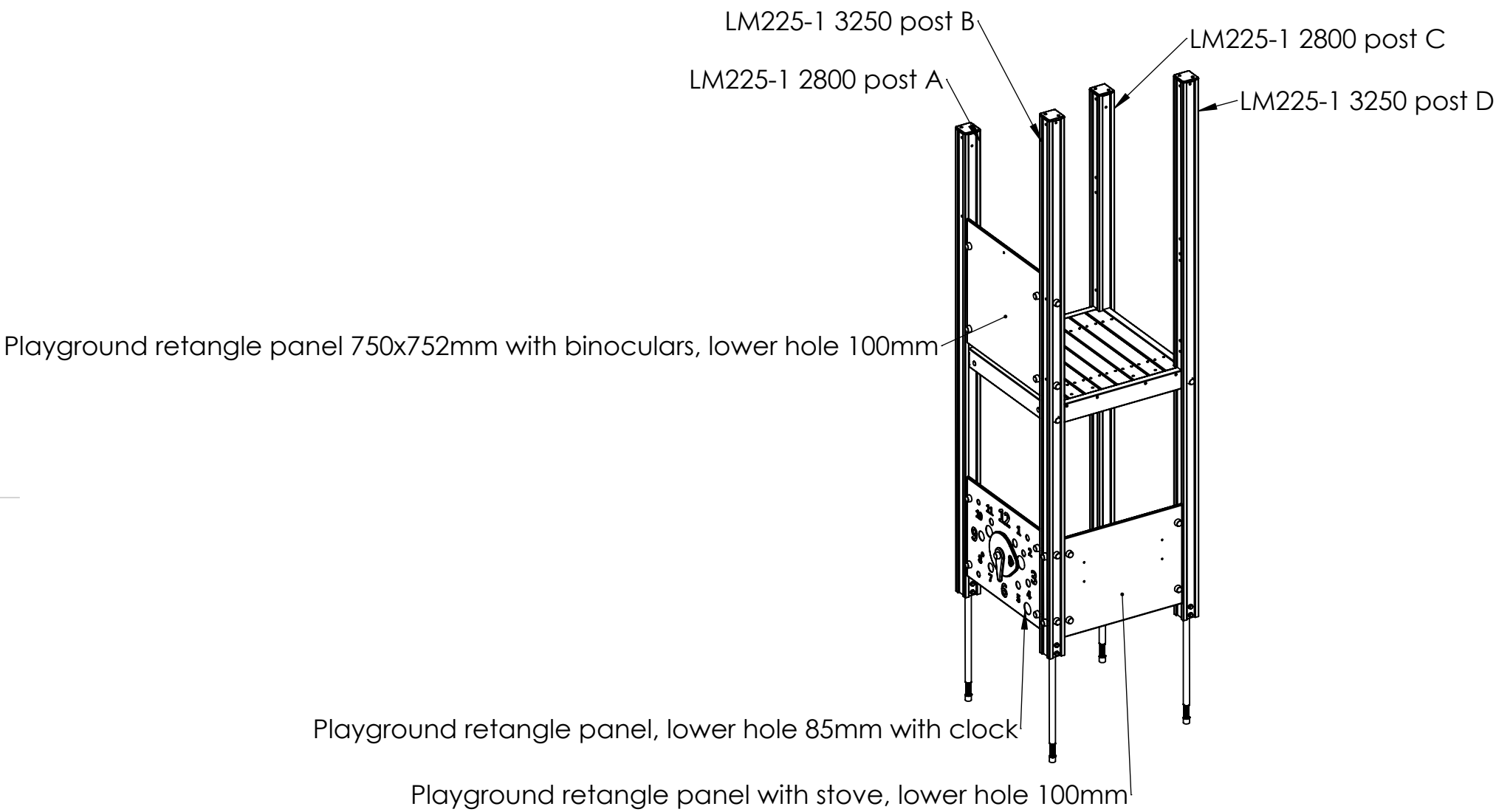

UNLESS OTHERWISE SPECIFIED:
DIMENSIONS ARE IN MILLIMETERS
WEIGHT ARE IN KILOGRAMM

	NAME	SIGNATURE	DATE
DRAWN	I.Agar		14.07.2023

Tiptiptap OÜ

Product code: LM225-1

DESCRIPTION: Play centre Hanna

A4

WEIGHT: | SCALE: 1:30 | SHEET 17 OF 55

Panel to post assembly

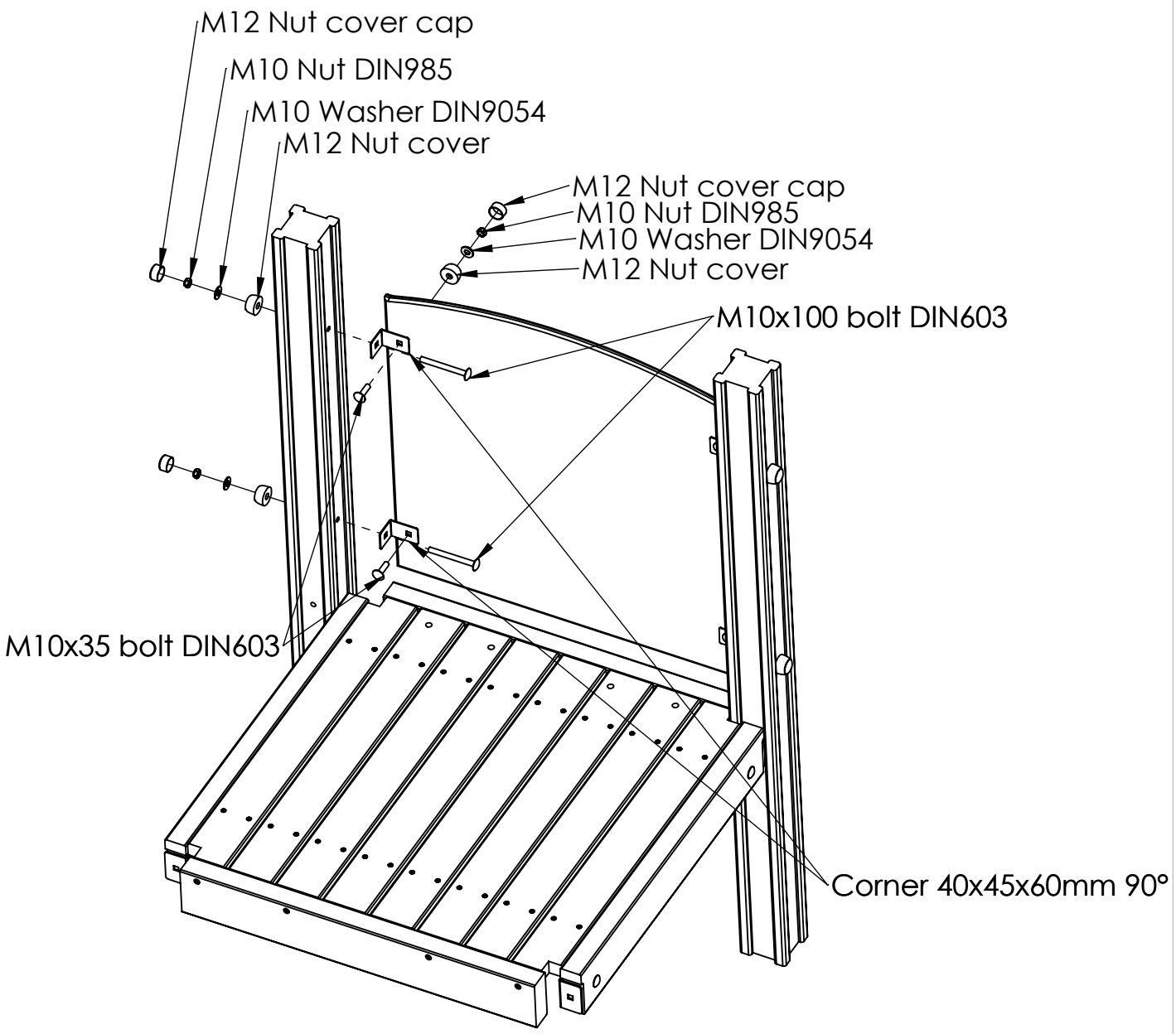

UNLESS OTHERWISE SPECIFIED: DIMENSIONS ARE IN MILLIMETERS WEIGHT ARE IN KILOGRAMM				Product code: LM225-1
	NAME	SIGNATURE	DATE	
DRAWN	I.Agar		14.07.2023	DESCRIPTION: Play centre Hanna
Tiptiptap OÜ				A4
				WEIGHT: / SCALE: 1:12 / SHEET 18 OF 55

Panel to post assembly

Explanation of the `**lower hole**` behind the panel name:

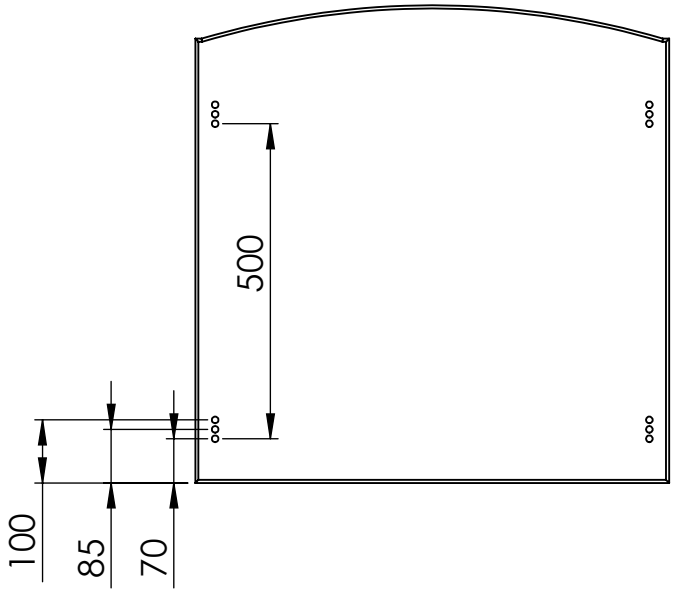

The panel must be installed on the post as shown in the picture!!!

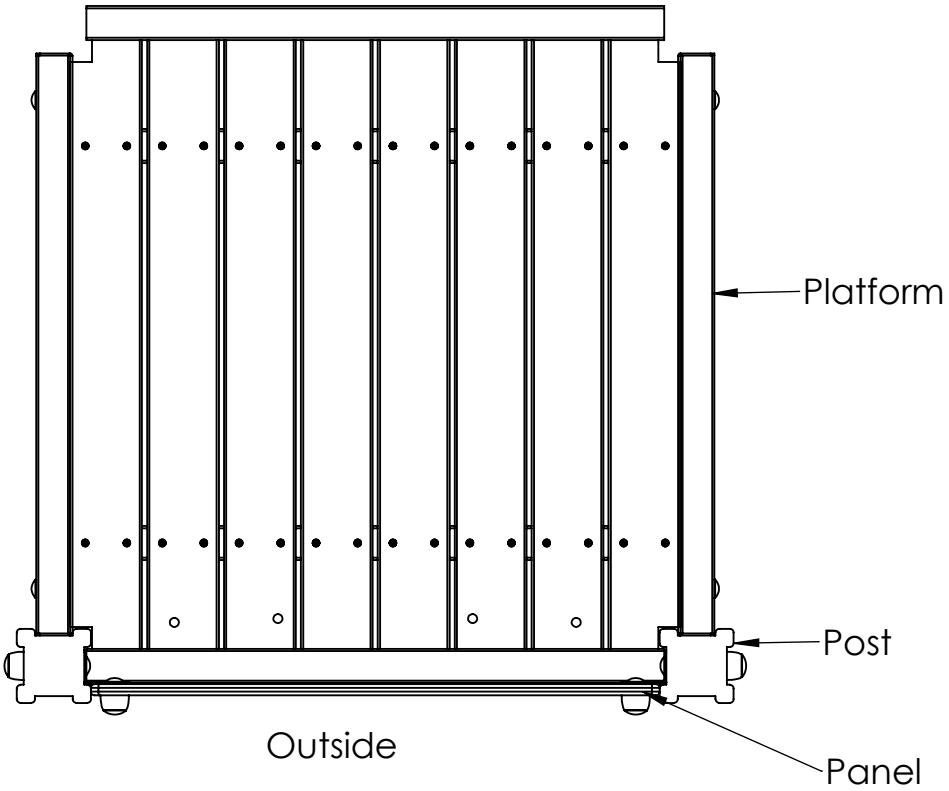

UNLESS OTHERWISE SPECIFIED: DIMENSIONS ARE IN MILLIMETERS WEIGHT ARE IN KILOGRAMM			
	NAME	SIGNATURE	DATE
DRAWN	I.Agar		14.07.2023

Tiptiptap OÜ

Product code: LM225-1

DESCRIPTION: Play centre Hanna

A4

WEIGHT: | SCALE: 1:10 | SHEET 19 OF 55

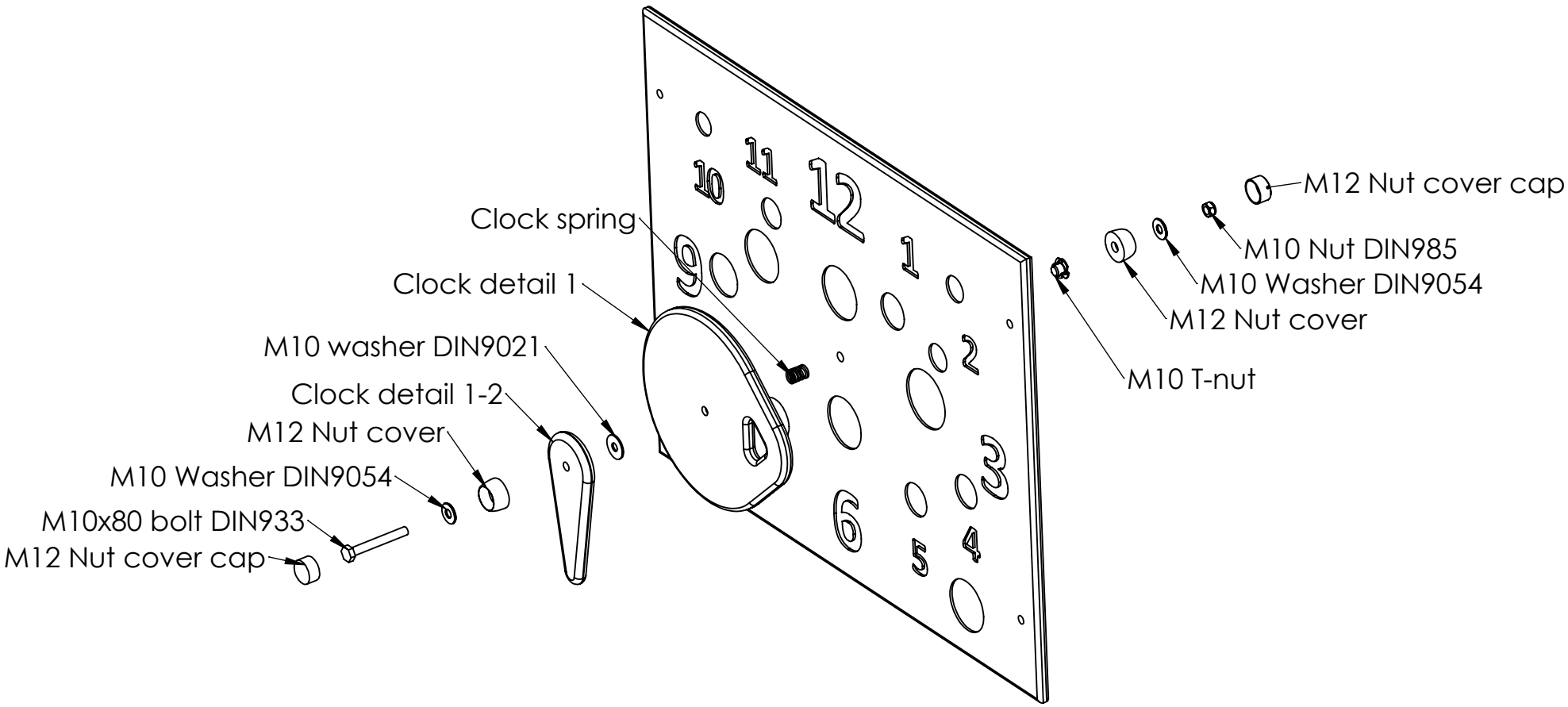

UNLESS OTHERWISE SPECIFIED: DIMENSIONS ARE IN MILLIMETERS WEIGHT ARE IN KILOGRAMM				Product code: LM225-1
	NAME	SIGNATURE	DATE	
DRAWN	I.Agar		14.07.2023	DESCRIPTION: Play centre Hanna
Tiptiptap OÜ				A4
				WEIGHT: / SCALE: 1:7 / SHEET 20 OF 55

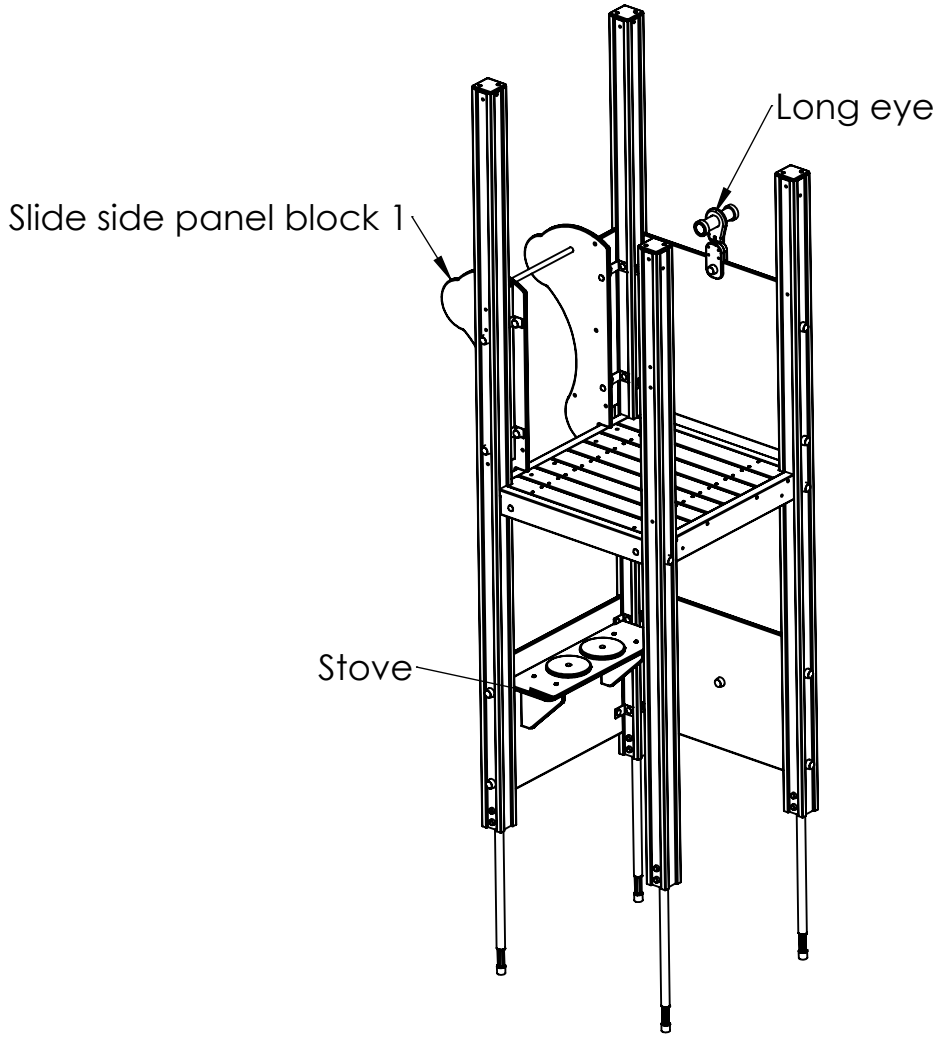

UNLESS OTHERWISE SPECIFIED:
DIMENSIONS ARE IN MILLIMETERS
WEIGHT ARE IN KILOGRAMM

	NAME	SIGNATURE	DATE
DRAWN	I.Agar		14.07.2023

Tiptiptap OÜ

Product code: LM225-1

DESCRIPTION: Play centre Hanna

A4

WEIGHT:

SCALE: 1:30

SHEET 21 OF 55

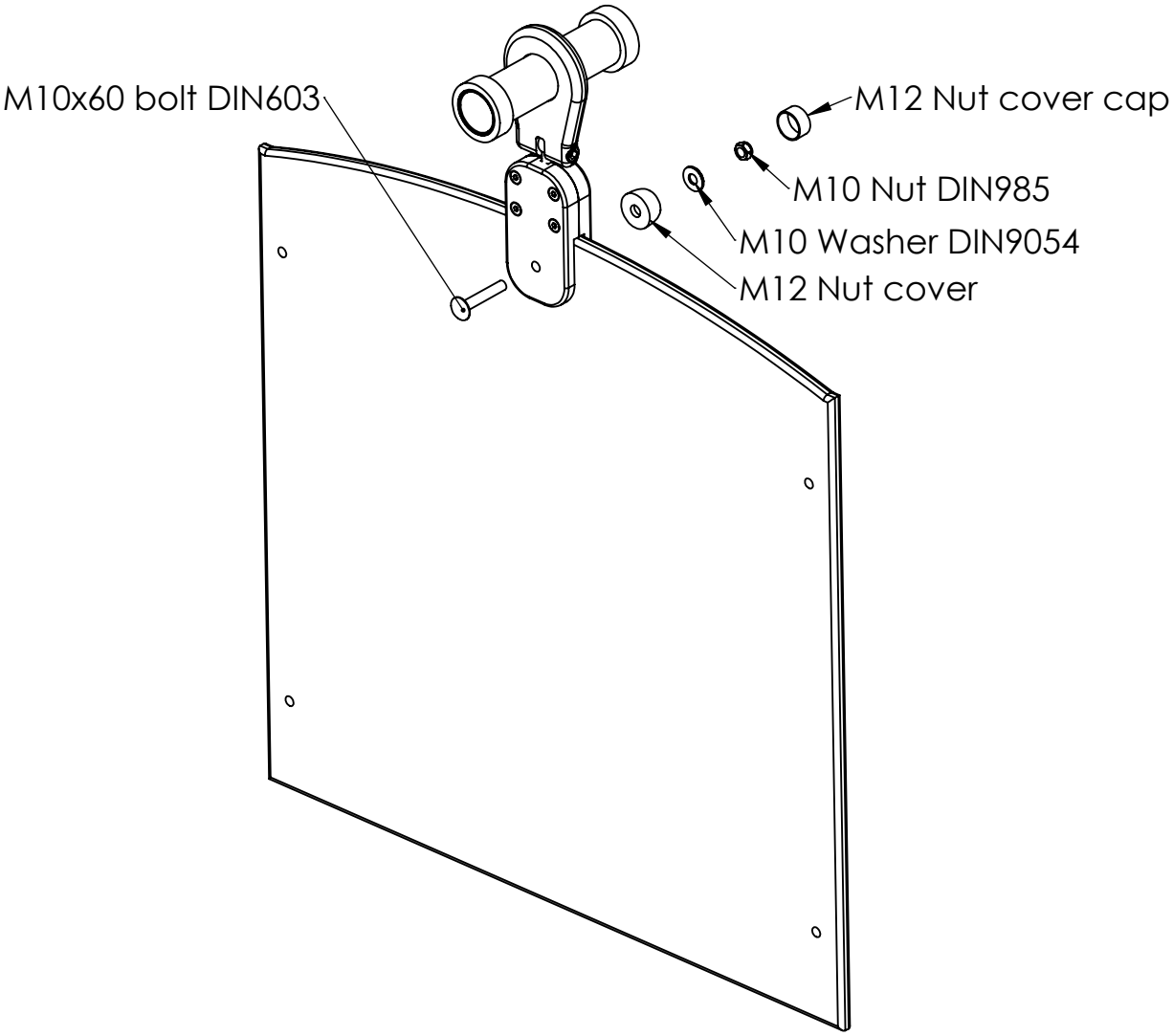

UNLESS OTHERWISE SPECIFIED:
DIMENSIONS ARE IN MILLIMETERS
WEIGHT ARE IN KILOGRAMM

	NAME	SIGNATURE	DATE
DRAWN	I.Agar		14.07.2023

Tiptiptap OÜ

Product code: LM225-1

DESCRIPTION: Play centre Hanna

A4

WEIGHT: | SCALE: 1:7 | SHEET 22 OF 55

Stove assembly

Step 1

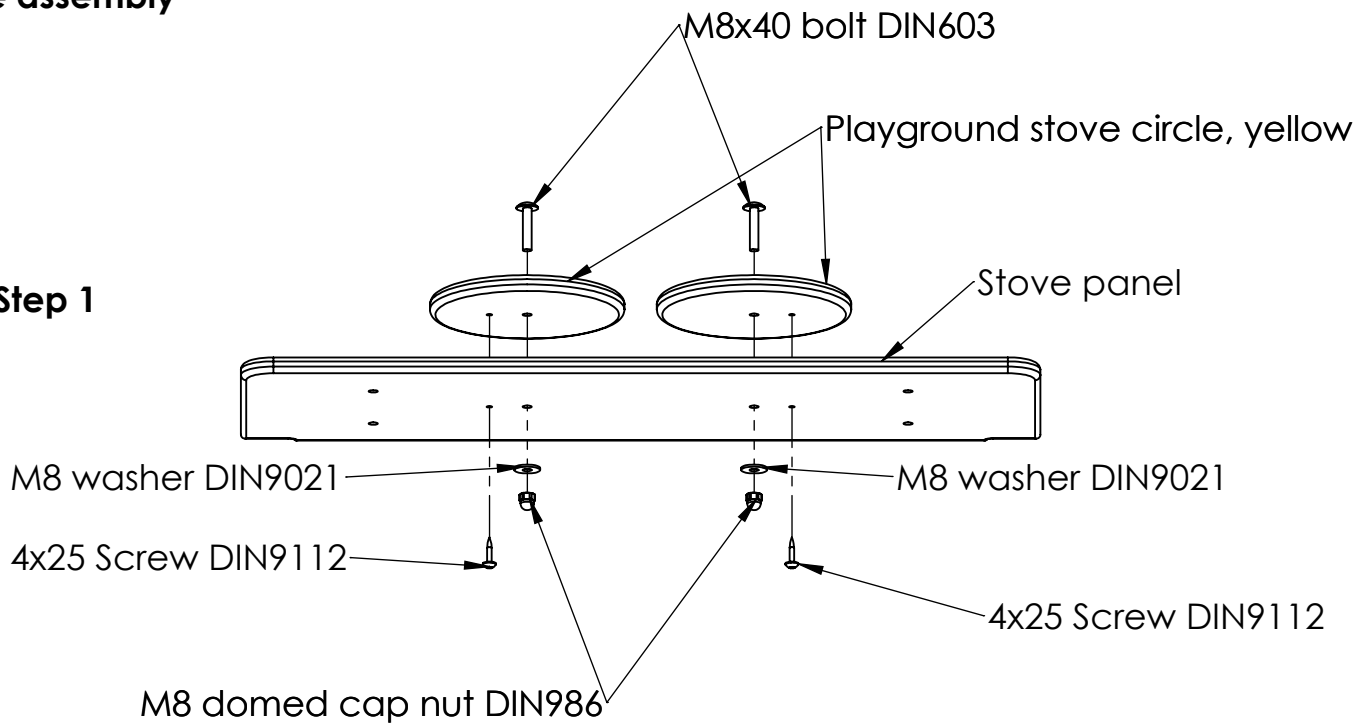

Step 2

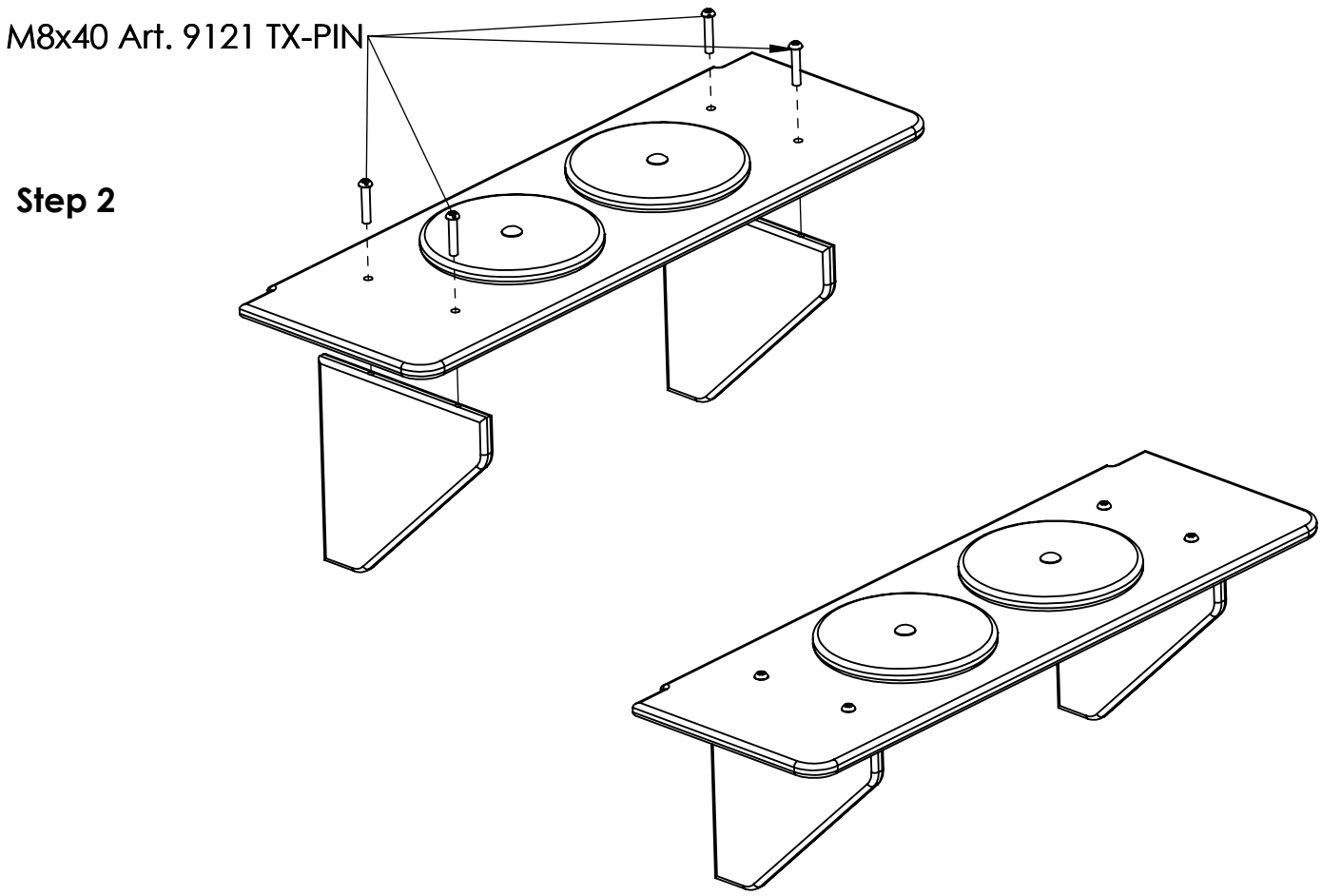

UNLESS OTHERWISE SPECIFIED: DIMENSIONS ARE IN MILLIMETERS WEIGHT ARE IN KILOGRAMM				Product code: LM225-1
	NAME	SIGNATURE	DATE	
DRAWN	I.Agar		14.07.2023	DESCRIPTION: Play centre Hanna
Tiptiptap OÜ				A4
			WEIGHT:	SCALE: 1:7 / SHEET 23 OF 55

Stove assembly

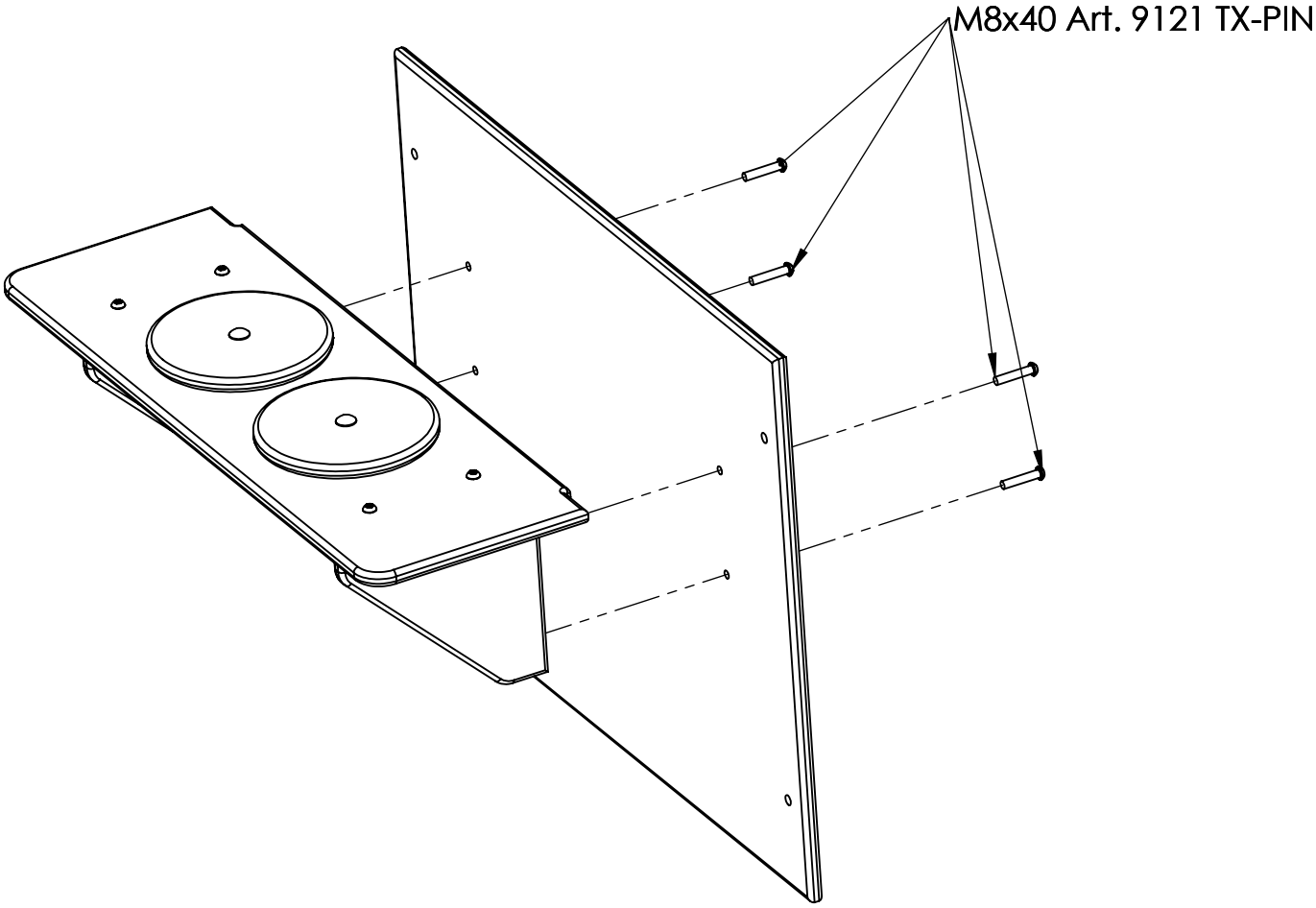

UNLESS OTHERWISE SPECIFIED: DIMENSIONS ARE IN MILLIMETERS WEIGHT ARE IN KILOGRAMM				Product code: LM225-1
	NAME	SIGNATURE	DATE	
DRAWN	I.Agar		14.07.2023	DESCRIPTION: Play centre Hanna
Tiptiptap OÜ				A4
				WEIGHT: / SCALE: 1:7 / SHEET 24 OF 55

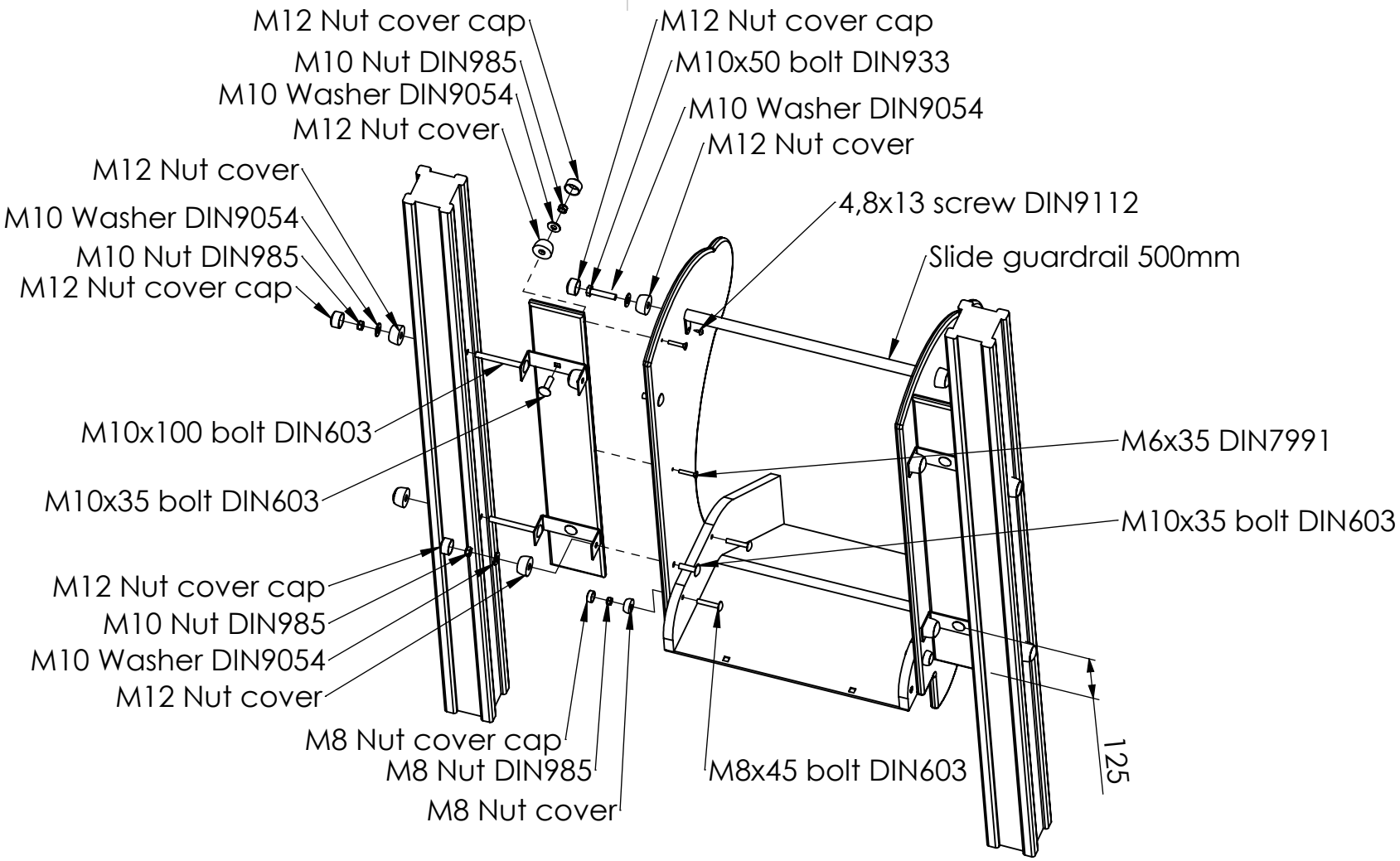

UNLESS OTHERWISE SPECIFIED: DIMENSIONS ARE IN MILLIMETERS WEIGHT ARE IN KILOGRAMM			
	NAME	SIGNATURE	DATE
DRAWN	I.Agar		14.07.2023
Tiptiptap OÜ			

Product code: LM225-1

DESCRIPTION: Play centre Hanna

A4

WEIGHT: SCALE: 1:12 SHEET 25 OF 55

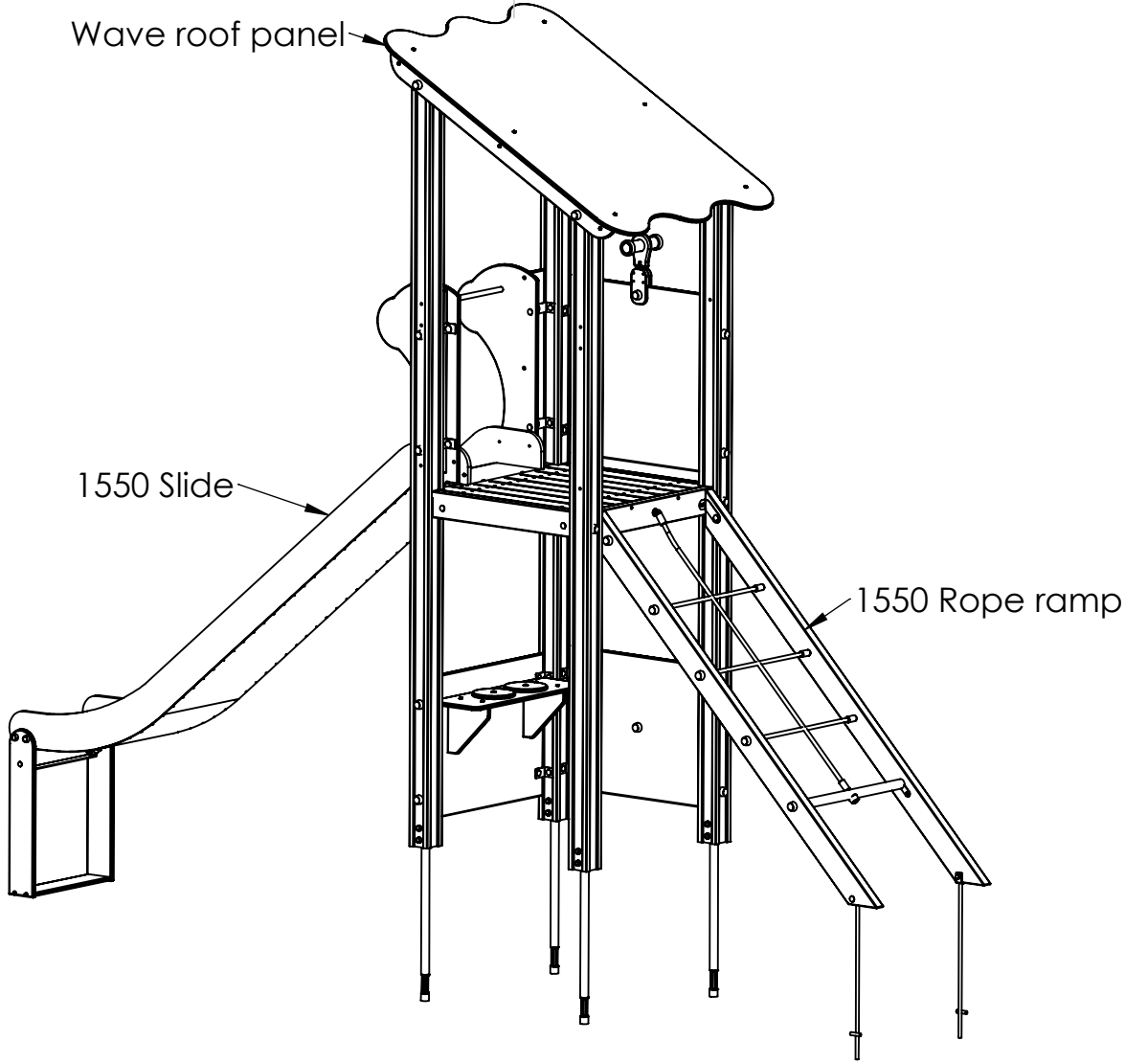

UNLESS OTHERWISE SPECIFIED:
DIMENSIONS ARE IN MILLIMETERS
WEIGHT ARE IN KILOGRAMM

	NAME	SIGNATURE	DATE
DRAWN	I.Agar		14.07.2023

Tiptiptap OÜ

Product code: LM225-1

DESCRIPTION: Play centre Hanna

A4

WEIGHT:

SCALE: 1:30

SHEET 26 OF 55

Slide to platform assembly

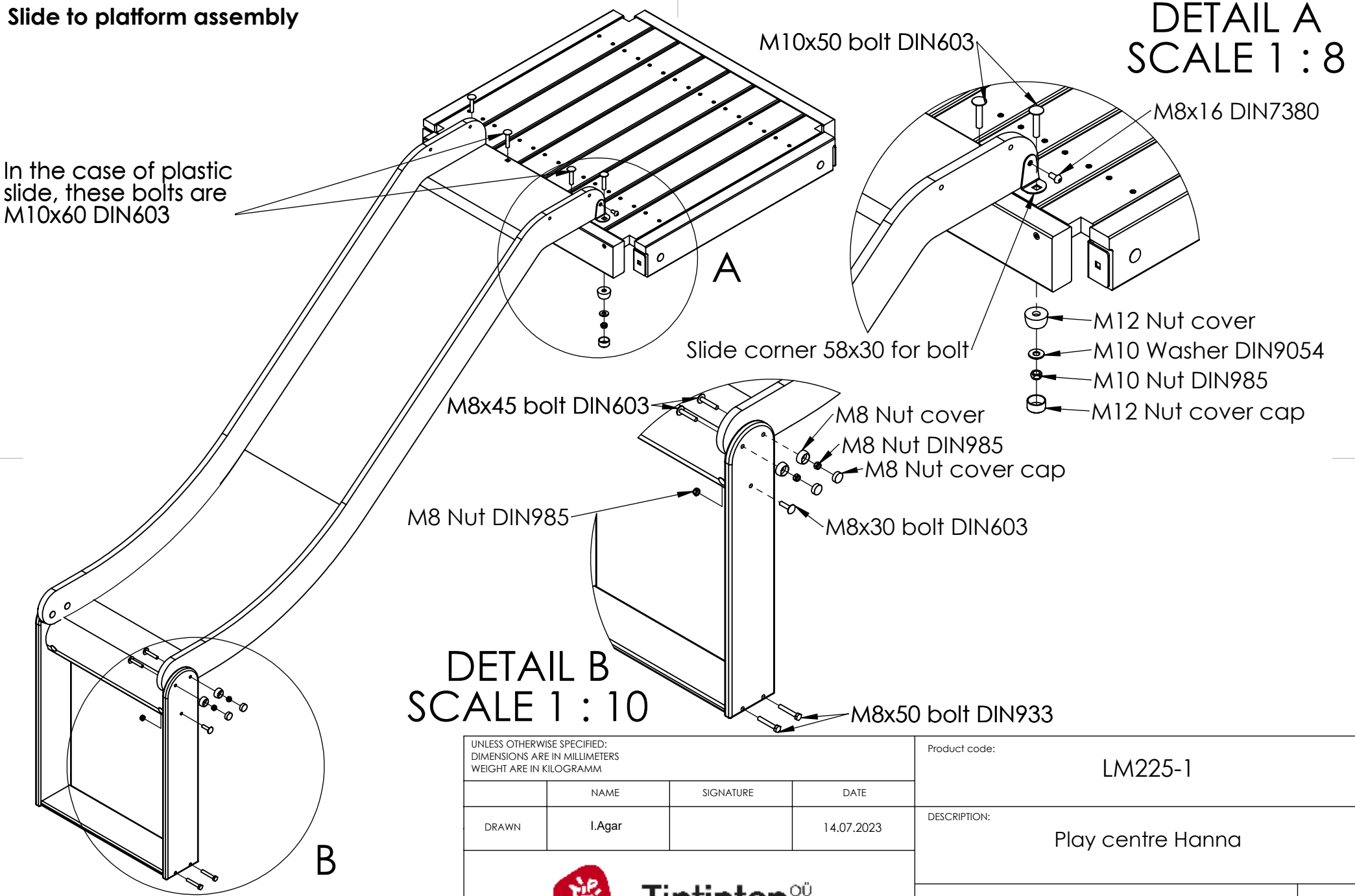

UNLESS OTHERWISE SPECIFIED:
DIMENSIONS ARE IN MILLIMETERS
WEIGHT ARE IN KILOGRAMM

	NAME	SIGNATURE	DATE
DRAWN	I.Agar		14.07.2023

Tiptiptap OÜ

Product code: LM225-1

DESCRIPTION: Play centre Hanna

A4

WEIGHT: | SCALE: 1:14 | SHEET 27 OF 55

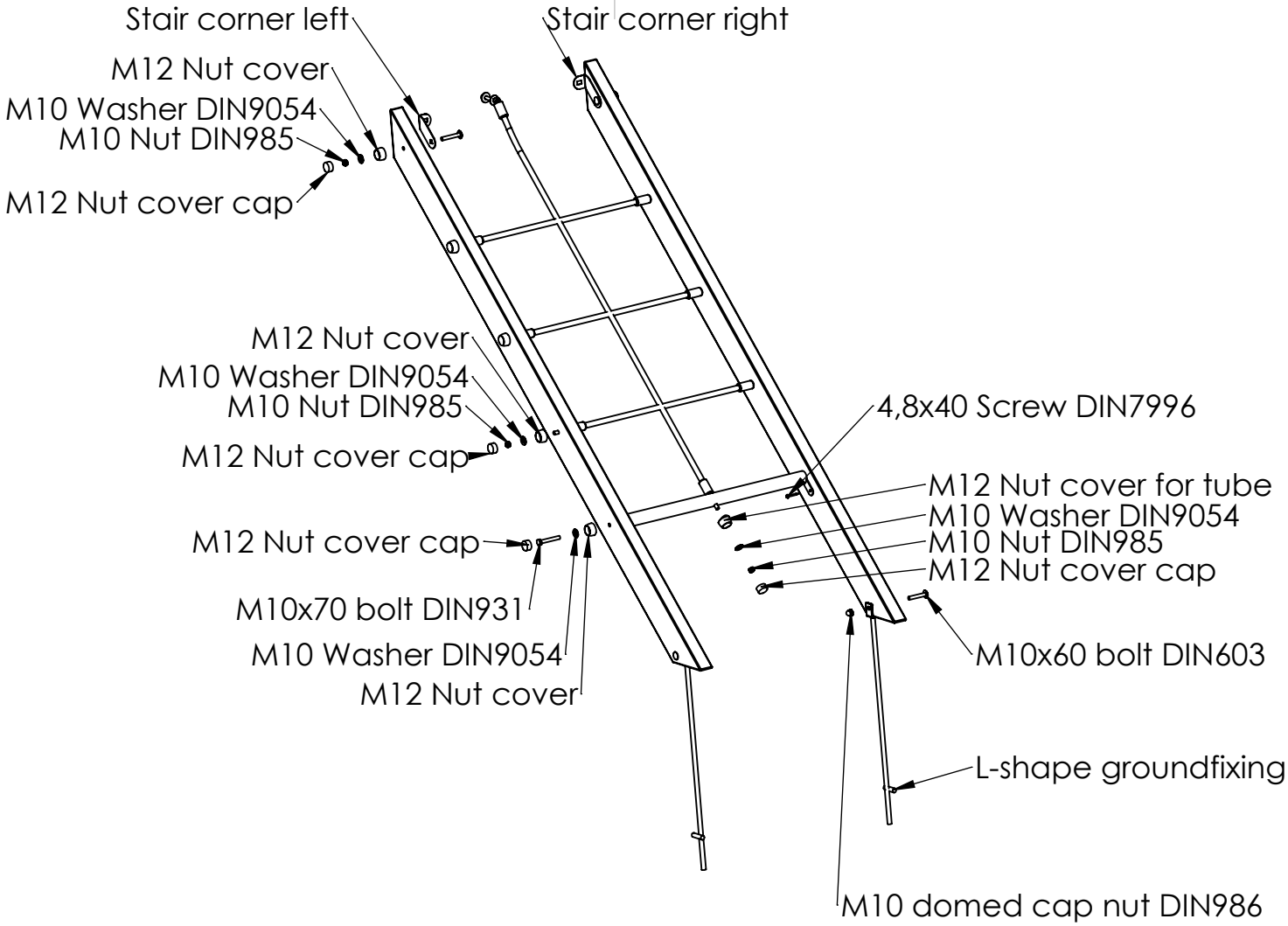

UNLESS OTHERWISE SPECIFIED: DIMENSIONS ARE IN MILLIMETERS WEIGHT ARE IN KILOGRAMM			
	NAME	SIGNATURE	DATE
DRAWN	I.Agar		14.07.2023
Tiptiptap OÜ			

Product code: LM225-1

DESCRIPTION: Play centre Hanna

A4

WEIGHT: | SCALE: 1:20 | SHEET 28 OF 55

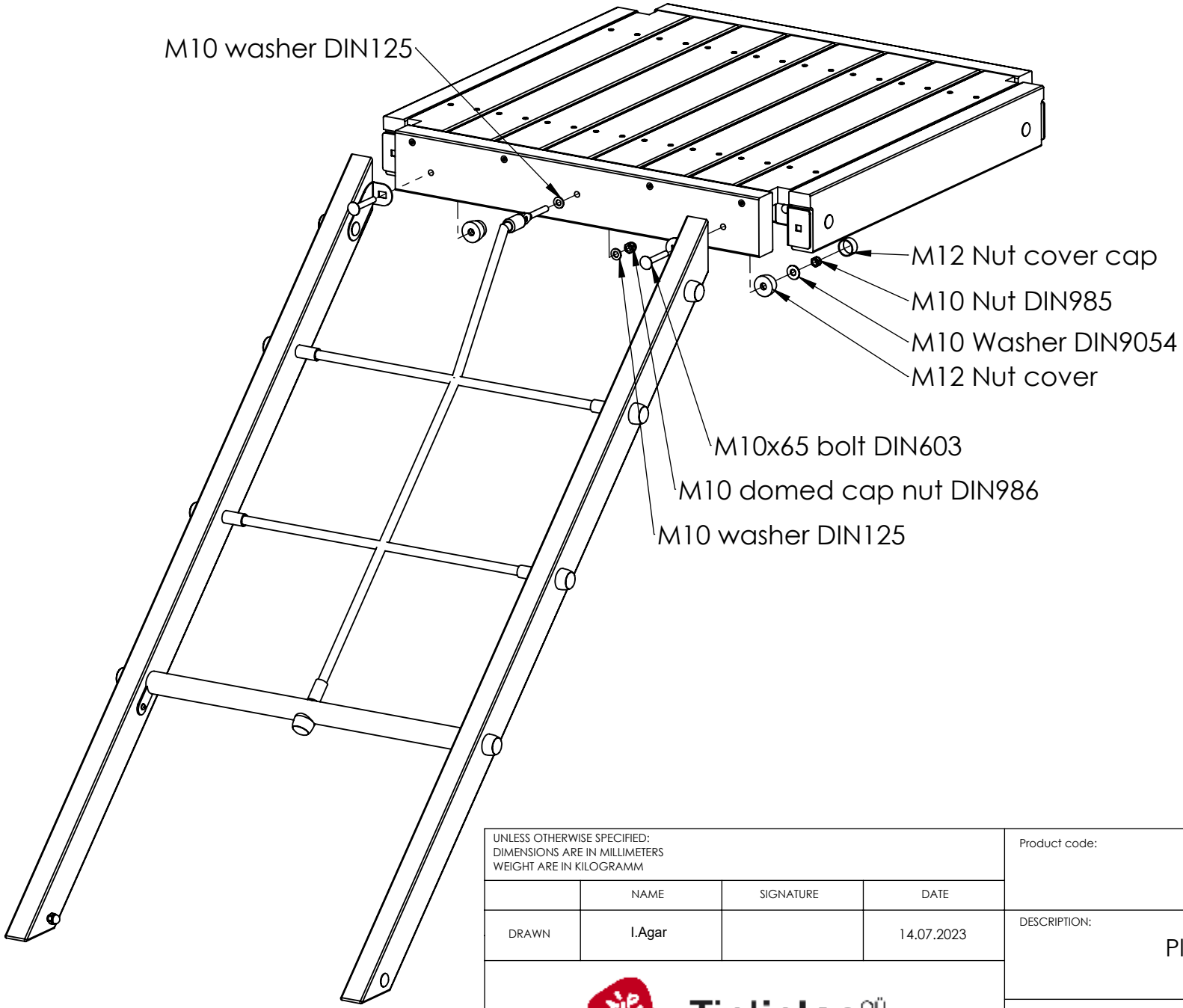

UNLESS OTHERWISE SPECIFIED:
DIMENSIONS ARE IN MILLIMETERS
WEIGHT ARE IN KILOGRAMM

	NAME	SIGNATURE	DATE
DRAWN	I.Agar		14.07.2023

Tiptiptap OÜ

Product code: LM225-1

DESCRIPTION: Play centre Hanna

A4

WEIGHT:

SCALE: 1:10

SHEET 29 OF 55

Wave roof assembly
Step 1

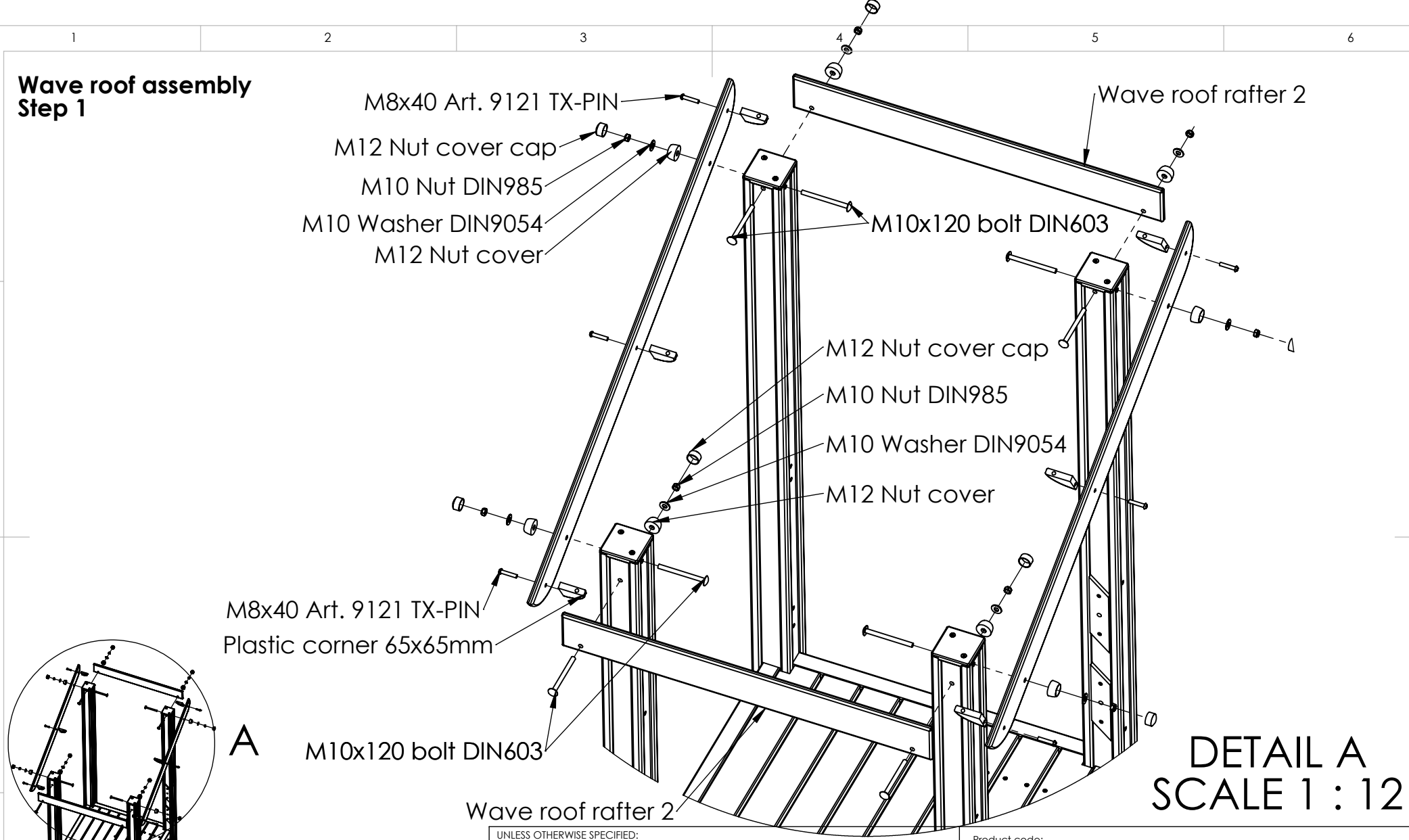

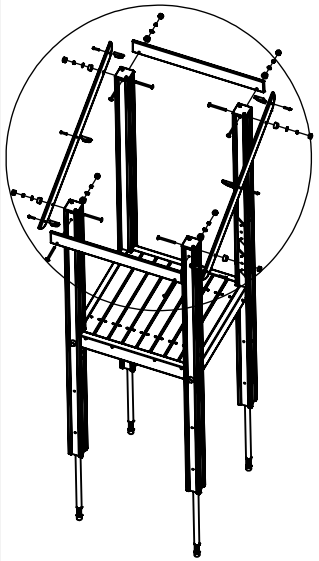

A

DETAIL A
SCALE 1 : 12

UNLESS OTHERWISE SPECIFIED:
DIMENSIONS ARE IN MILLIMETERS
WEIGHT ARE IN KILOGRAMM

	NAME	SIGNATURE	DATE
DRAWN	I.Agar		14.07.2023

Tiptiptap OÜ

Product code: LM225-1

DESCRIPTION: Play centre Hanna

A4

WEIGHT: | SCALE: 1:50 | SHEET 30 OF 55

Wave roof assembly
Step 2

DETAIL B
SCALE 1 : 15

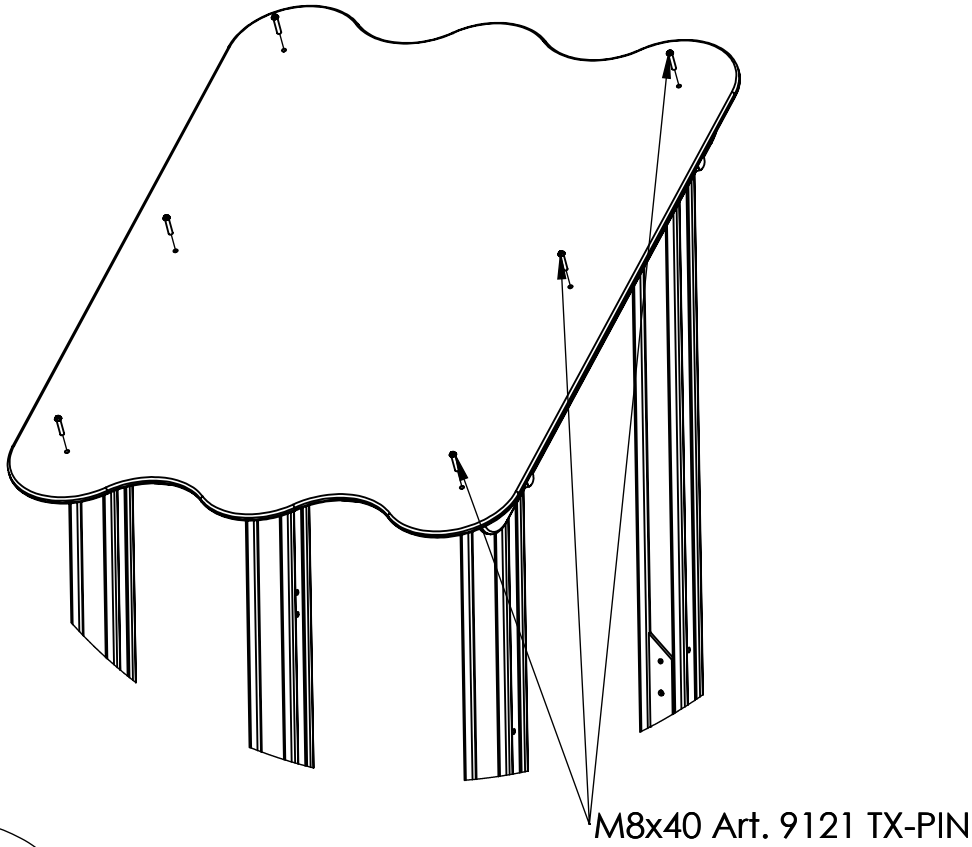

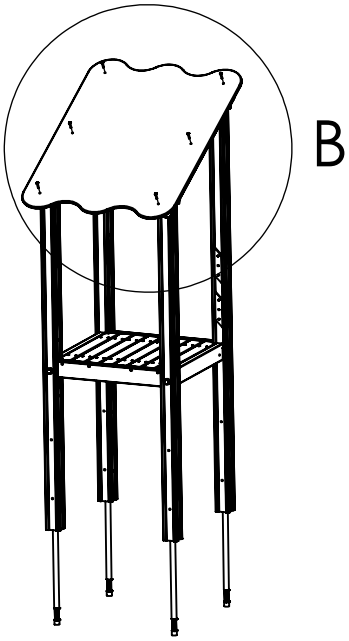

UNLESS OTHERWISE SPECIFIED: DIMENSIONS ARE IN MILLIMETERS WEIGHT ARE IN KILOGRAMM				Product code: LM225-1
	NAME	SIGNATURE	DATE	
DRAWN	I.Agar		14.07.2023	DESCRIPTION: Play centre Hanna
Tiptiptap OÜ				A4
				WEIGHT: / SCALE: 1:50 / SHEET 31 OF 55

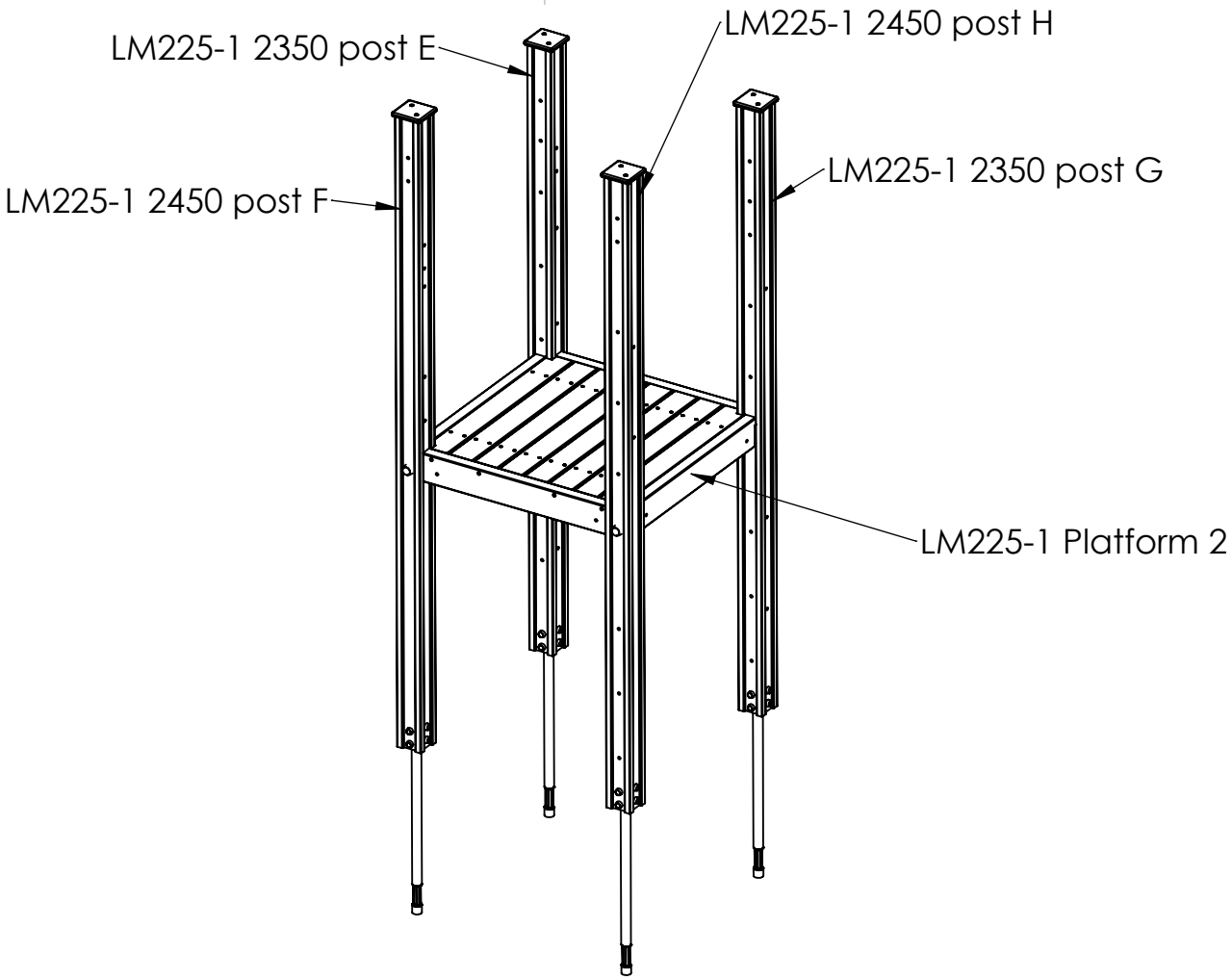

UNLESS OTHERWISE SPECIFIED:
DIMENSIONS ARE IN MILLIMETERS
WEIGHT ARE IN KILOGRAMM

	NAME	SIGNATURE	DATE
DRAWN	I.Agar		14.07.2023

Tiptiptap OÜ

Product code: LM225-1

DESCRIPTION: Play centre Hanna

A4

WEIGHT: | SCALE: 1:25 | SHEET 32 OF 55

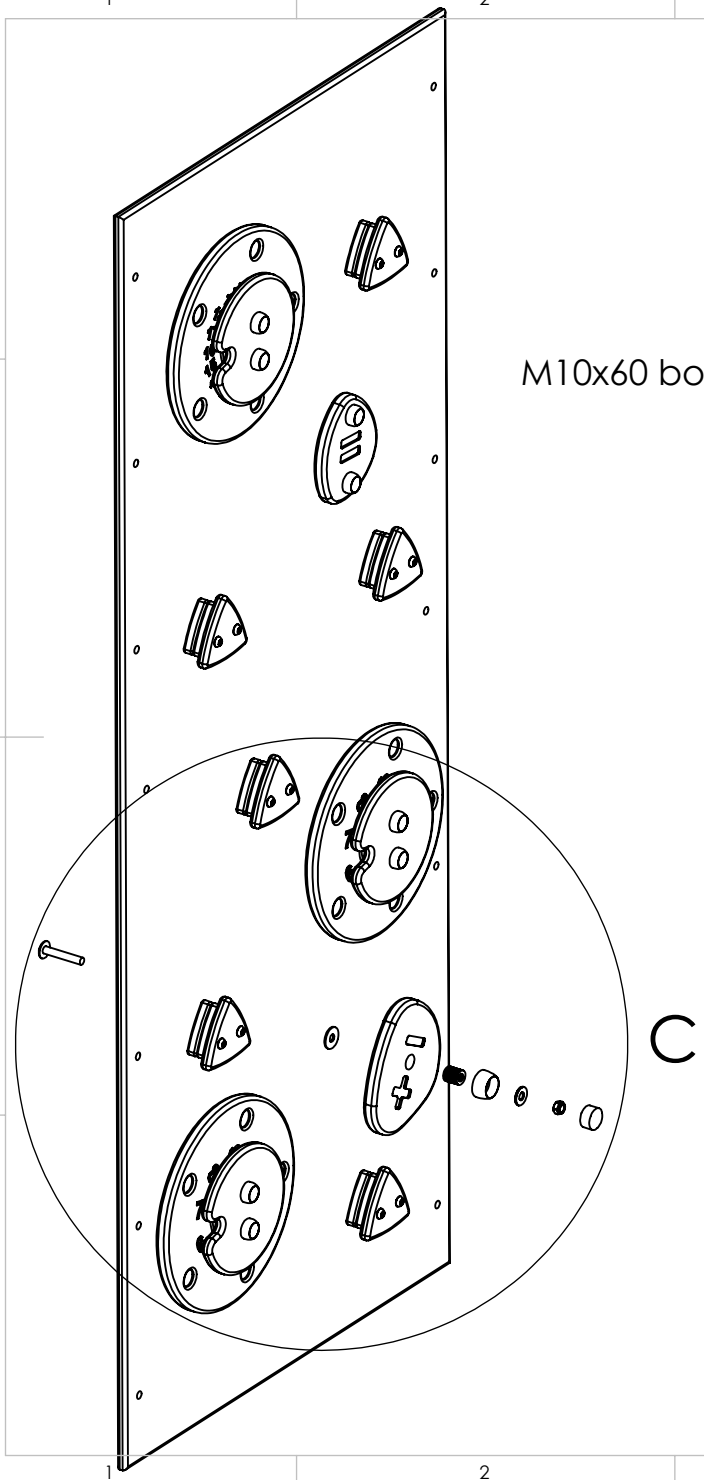

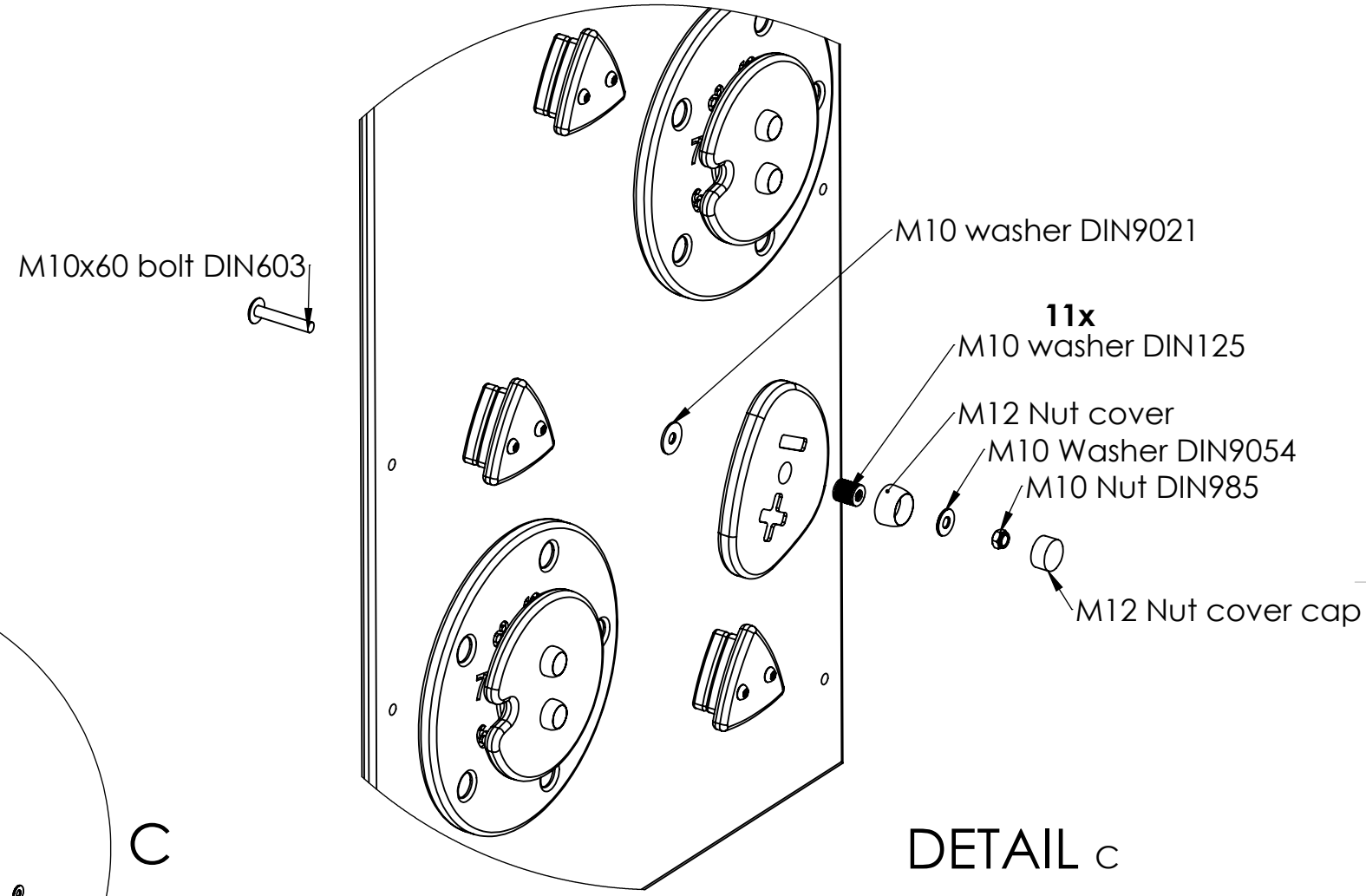

DETAIL C

SCALE 1 : 6

UNLESS OTHERWISE SPECIFIED:
DIMENSIONS ARE IN MILLIMETERS
WEIGHT ARE IN KILOGRAMM

	NAME	SIGNATURE	DATE
DRAWN	I.Agar		14.07.2023

Tiptiptap OÜ

Product code: LM225-1

DESCRIPTION: Play centre Hanna

A4

WEIGHT: | SCALE: 1:10 | SHEET 33 OF 55

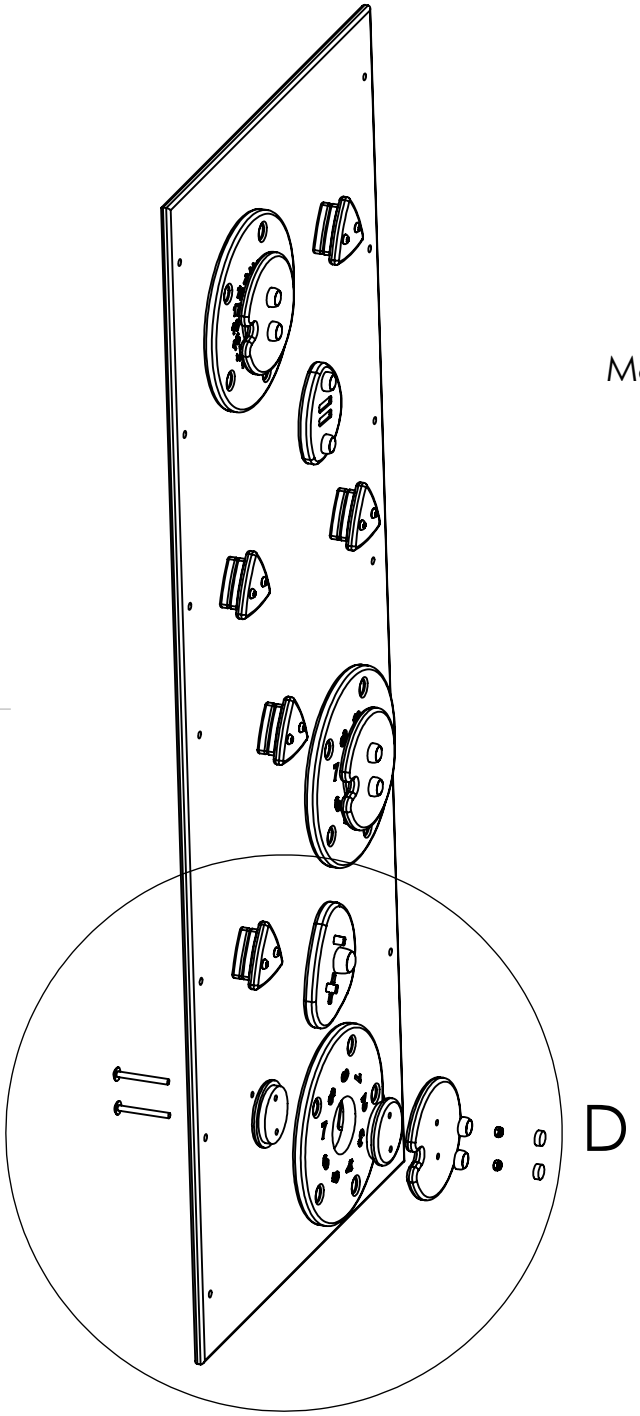

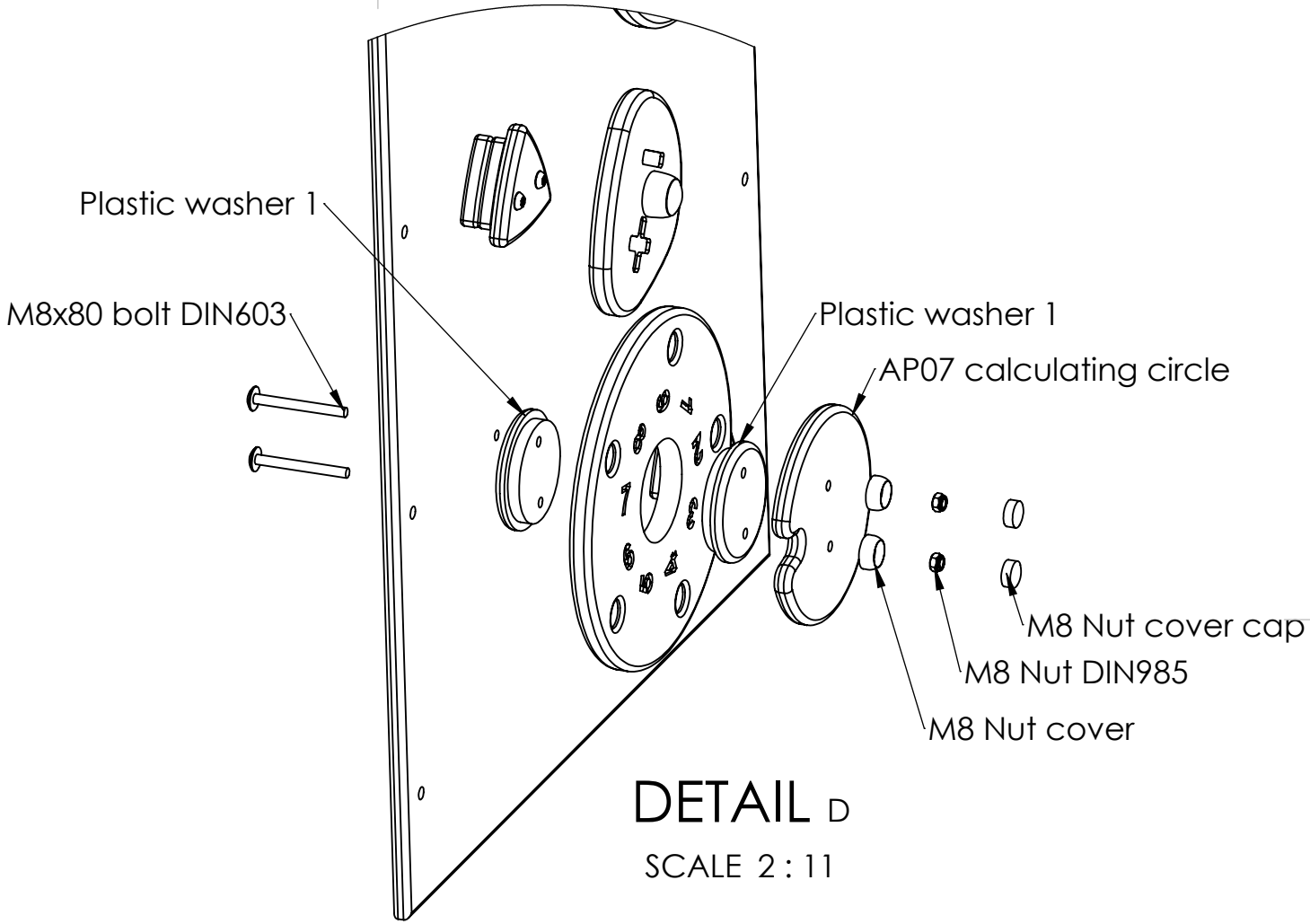

DETAIL D

SCALE 2 : 11

UNLESS OTHERWISE SPECIFIED:
DIMENSIONS ARE IN MILLIMETERS
WEIGHT ARE IN KILOGRAMM

	NAME	SIGNATURE	DATE
DRAWN	I.Agar		14.07.2023

Tiptiptap OÜ

Product code: LM225-1

DESCRIPTION: Play centre Hanna

A4

WEIGHT:

SCALE: 1:11

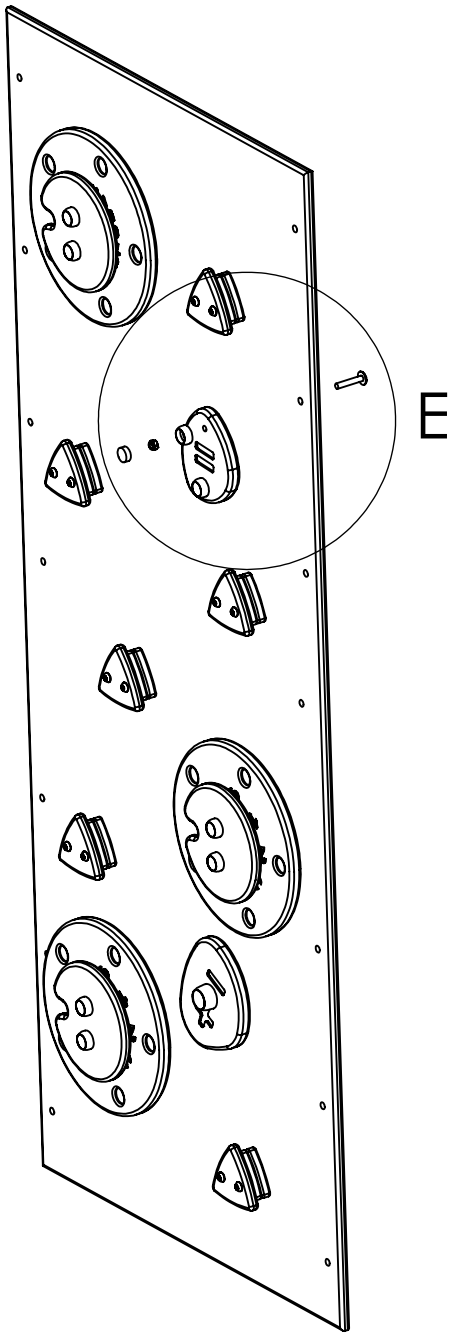

DETAIL E

SCALE 2 : 11

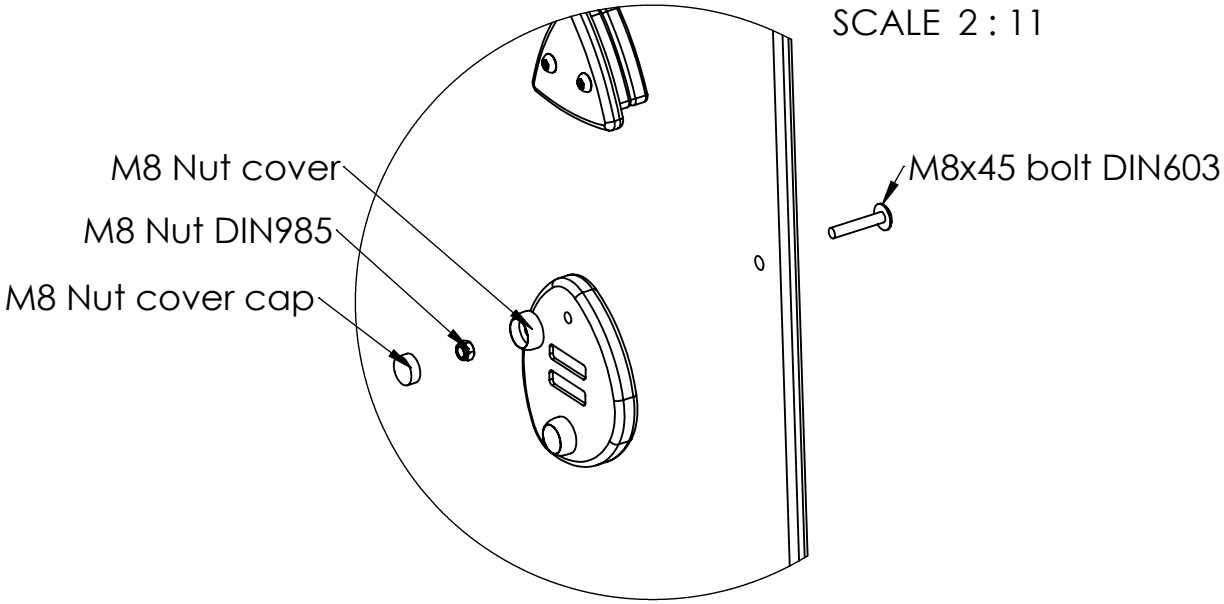

UNLESS OTHERWISE SPECIFIED:
DIMENSIONS ARE IN MILLIMETERS
WEIGHT ARE IN KILOGRAMM

	NAME	SIGNATURE	DATE
DRAWN	I.Agar		14.07.2023

Tiptiptap OÜ

Product code: LM225-1

DESCRIPTION: Play centre Hanna

A4

WEIGHT:

SCALE: 1:11

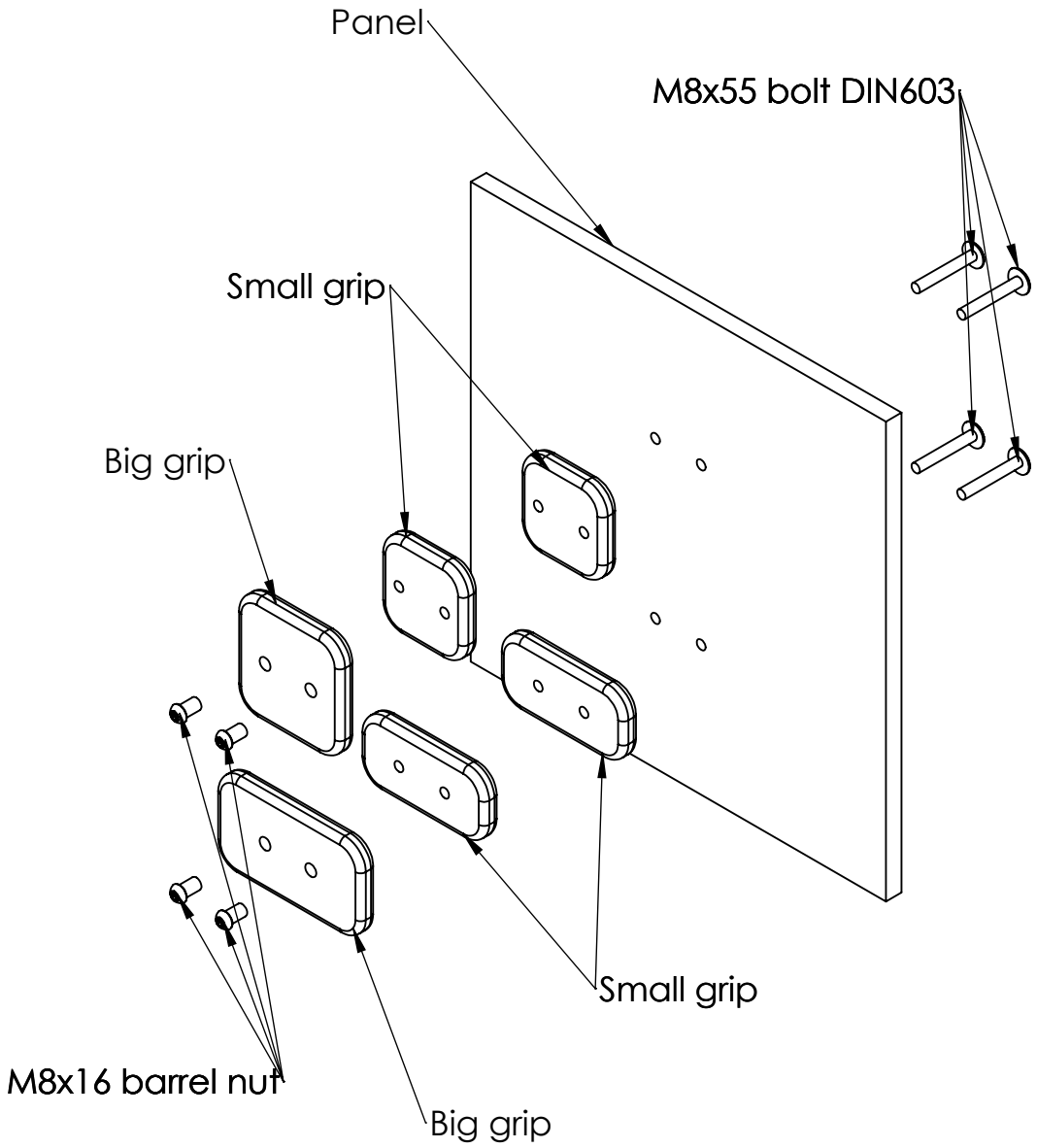

UNLESS OTHERWISE SPECIFIED:
DIMENSIONS ARE IN MILLIMETERS
WEIGHT ARE IN KILOGRAMM

	NAME	SIGNATURE	DATE
DRAWN	I.Agar		14.07.2023

Tiptiptap OÜ

Product code: LM225-1

DESCRIPTION: Play centre Hanna

A4

WEIGHT: | SCALE: 1:5 | SHEET 36 OF 55

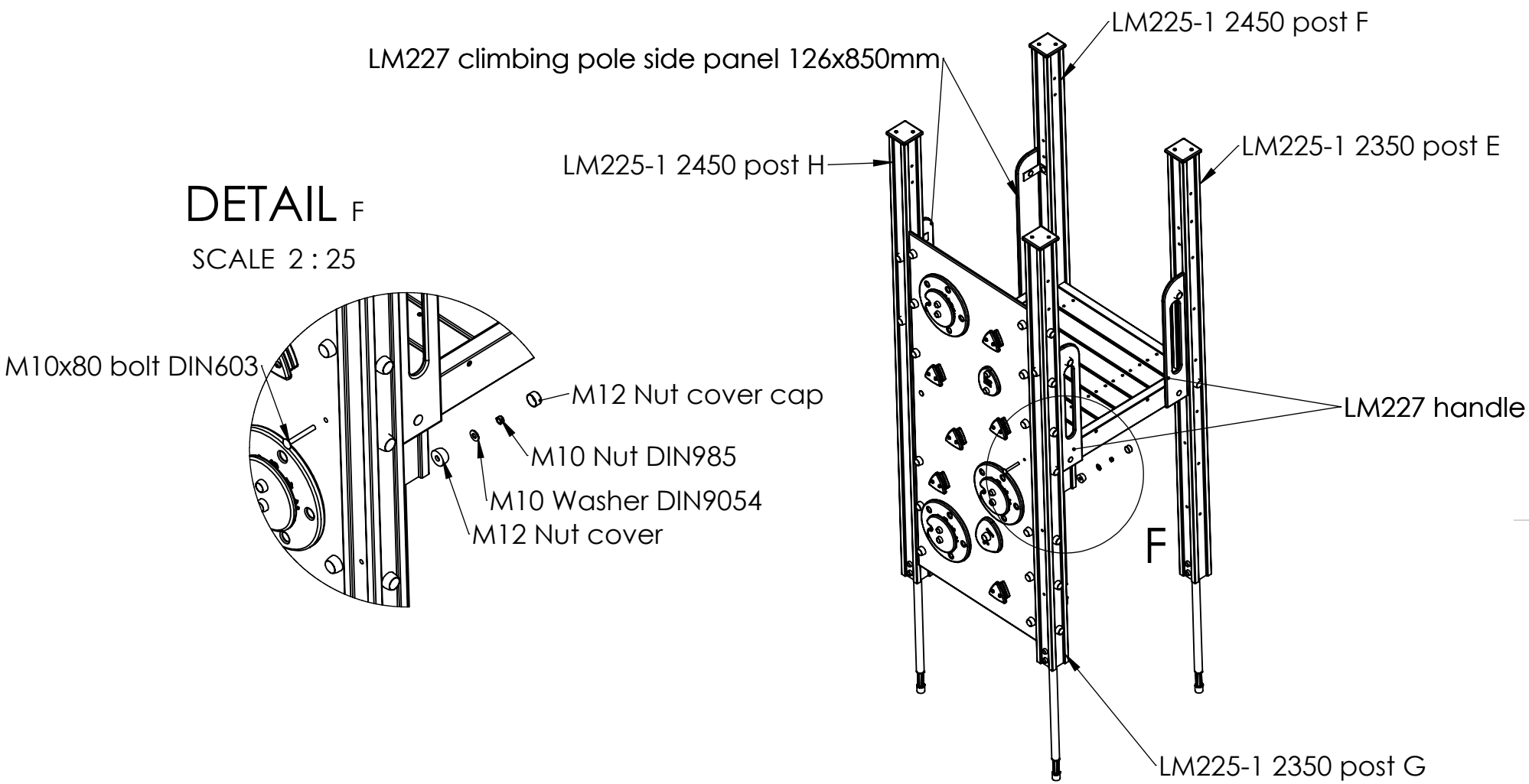

UNLESS OTHERWISE SPECIFIED: DIMENSIONS ARE IN MILLIMETERS WEIGHT ARE IN KILOGRAMM				Product code: LM225-1
	NAME	SIGNATURE	DATE	
DRAWN	I.Agar		14.07.2023	DESCRIPTION: Play centre Hanna
Tiptiptap OÜ				A4
				WEIGHT: / SCALE: 1:25 / SHEET 37 OF 55

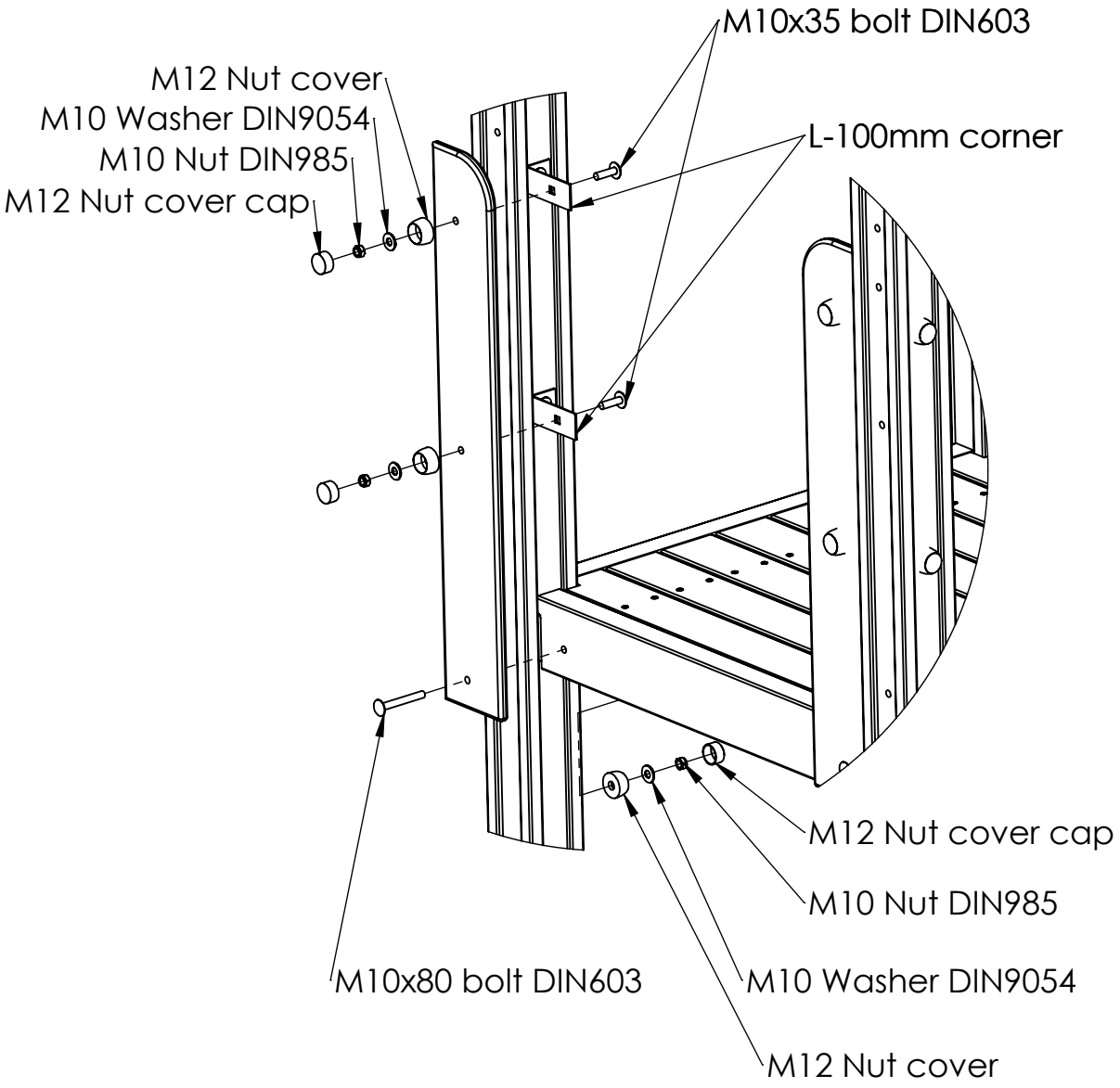

UNLESS OTHERWISE SPECIFIED: DIMENSIONS ARE IN MILLIMETERS WEIGHT ARE IN KILOGRAMM				Product code: LM225-1
	NAME	SIGNATURE	DATE	
DRAWN	I.Agar		14.07.2023	DESCRIPTION: Play centre Hanna
Tiptiptap OÜ				A4
				WEIGHT: / SCALE: 1:50 / SHEET 38 OF 55

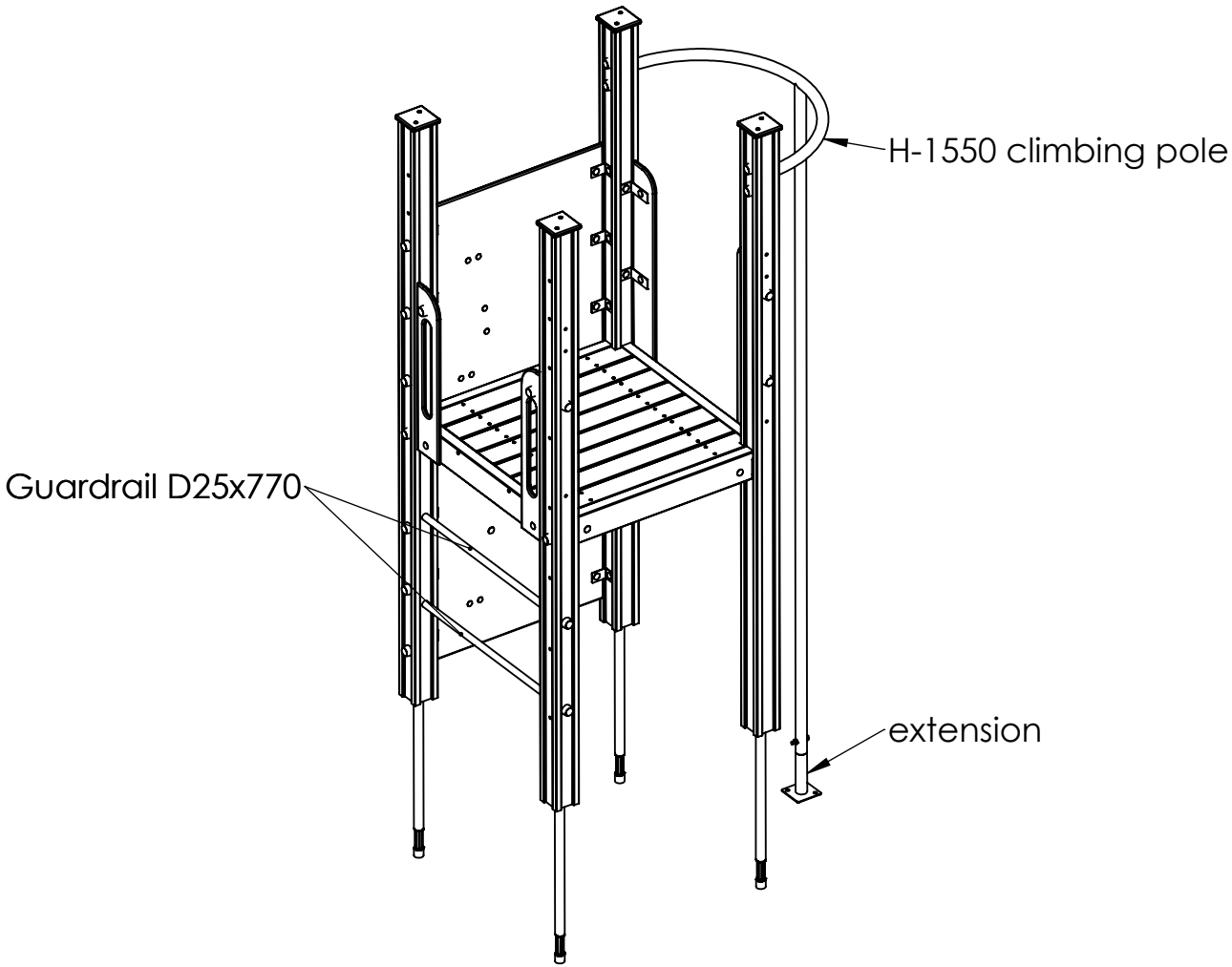

UNLESS OTHERWISE SPECIFIED:
DIMENSIONS ARE IN MILLIMETERS
WEIGHT ARE IN KILOGRAMM

	NAME	SIGNATURE	DATE
DRAWN	I.Agar		14.07.2023

Tiptiptap OÜ

Product code: LM225-1

DESCRIPTION: Play centre Hanna

A4

WEIGHT:

SCALE: 1:25

Guardrail installation to aluminium post

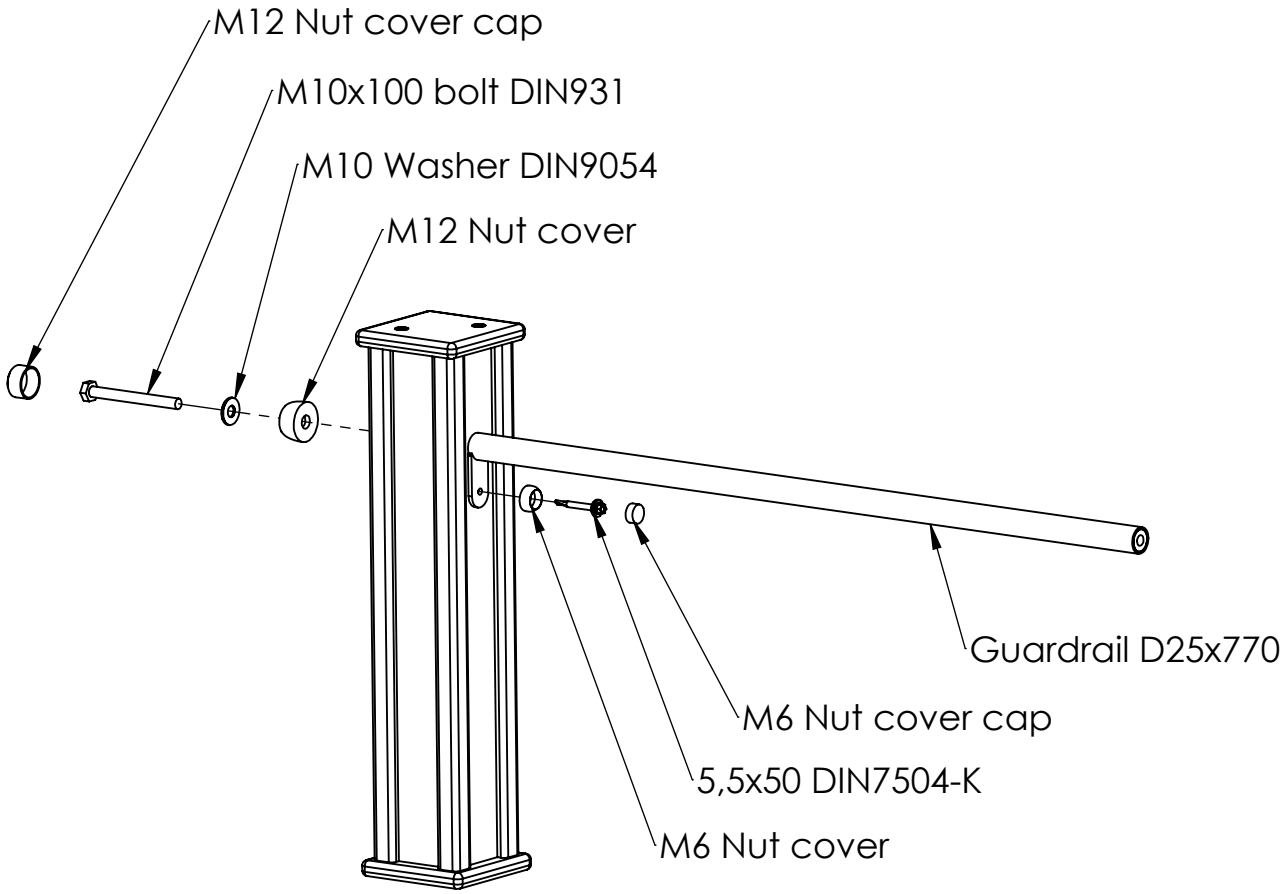

UNLESS OTHERWISE SPECIFIED: DIMENSIONS ARE IN MILLIMETERS WEIGHT ARE IN KILOGRAMM				Product code: LM225-1	
	NAME	SIGNATURE	DATE		
DRAWN	I.Agar		14.07.2023	DESCRIPTION: Play centre Hanna	
Tiptiptap OÜ					A4
				WEIGHT:	SCALE: 1:7	SHEET 40 OF 55

Guardrail to wood post assembly

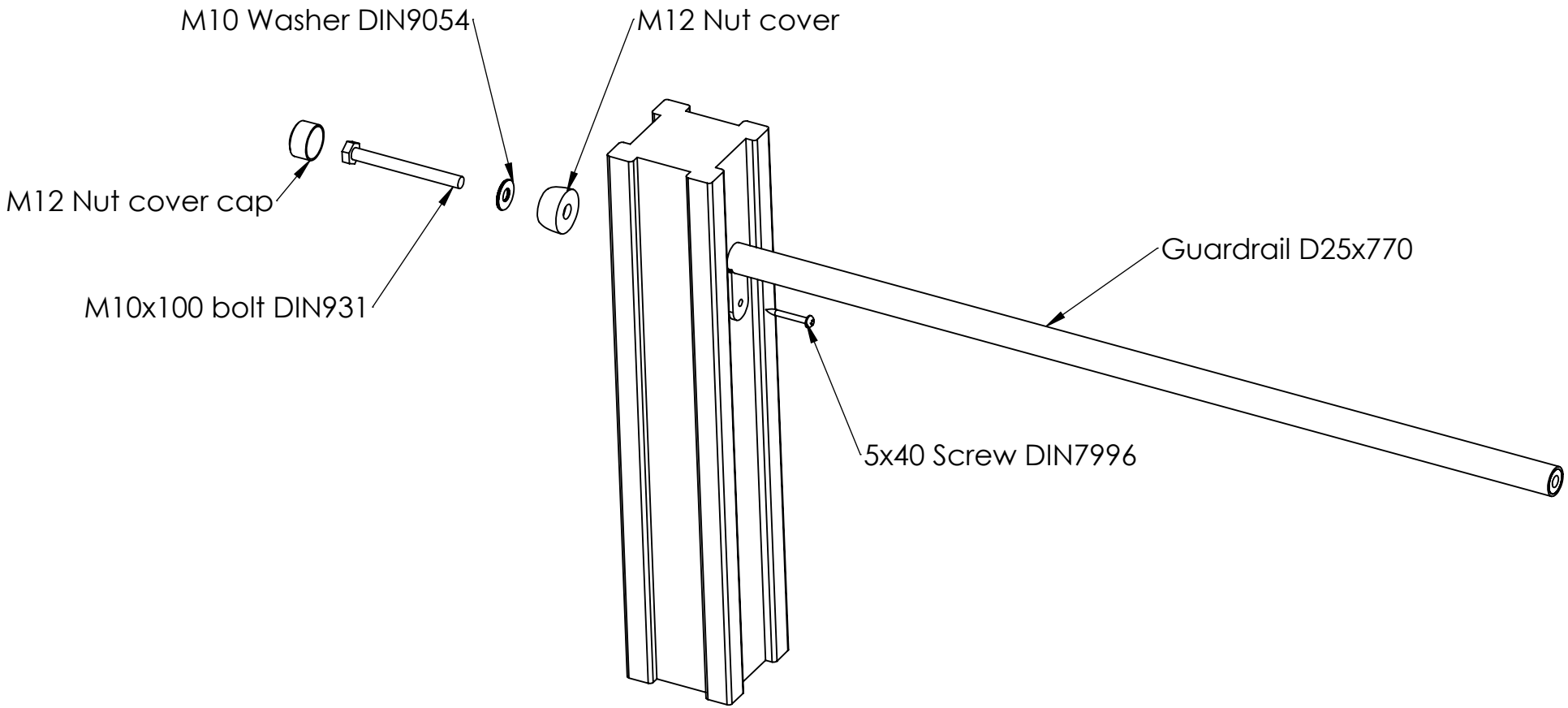

UNLESS OTHERWISE SPECIFIED:
DIMENSIONS ARE IN MILLIMETERS
WEIGHT ARE IN KILOGRAMM

	NAME	SIGNATURE	DATE
DRAWN	I.Agar		14.07.2023

Tiptiptap OÜ

Product code: LM225-1

DESCRIPTION: Play centre Hanna

A4

WEIGHT: | SCALE: 1:5 | SHEET 41 OF 55

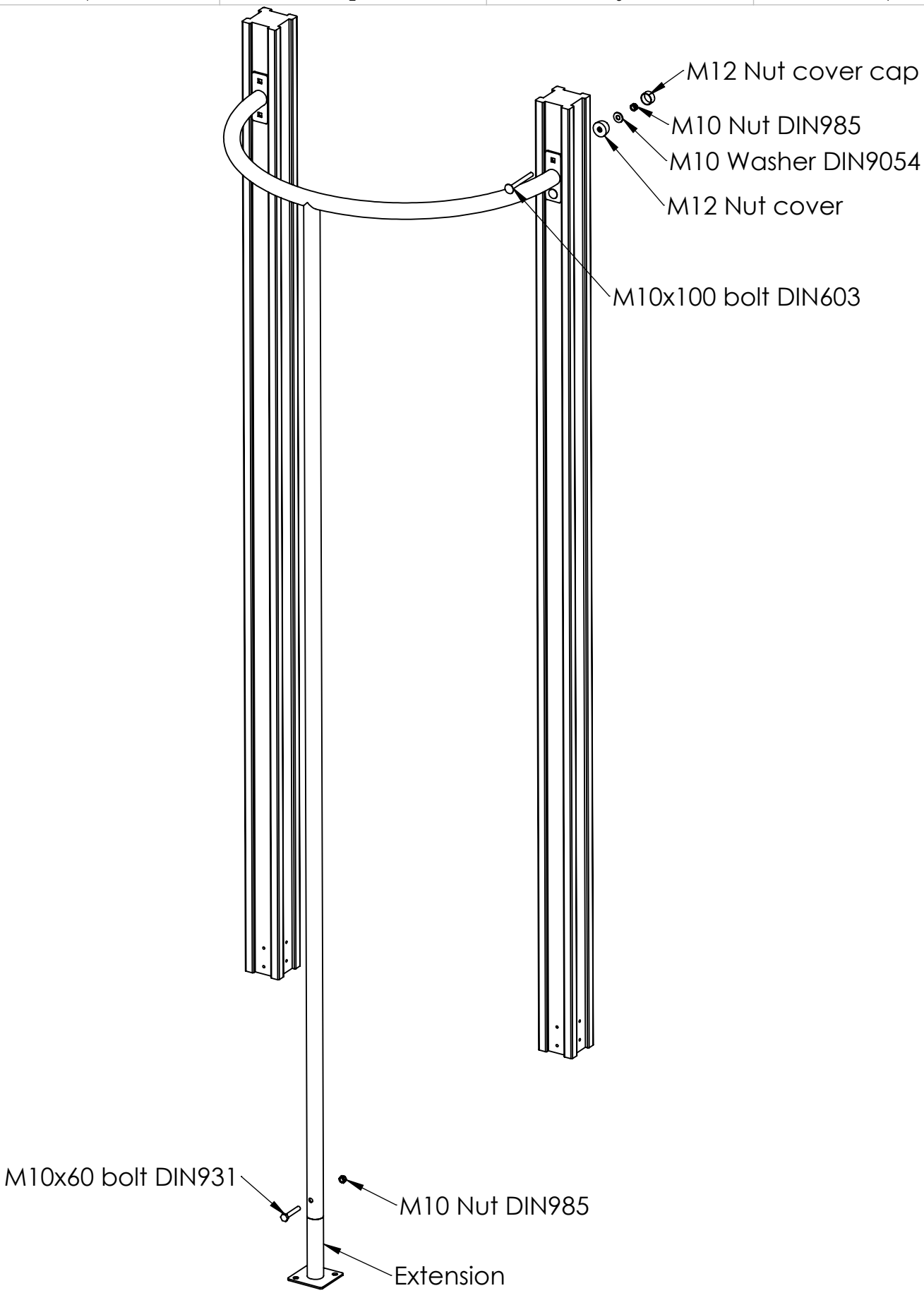

UNLESS OTHERWISE SPECIFIED:
DIMENSIONS ARE IN MILLIMETERS
WEIGHT ARE IN KILOGRAMM

	NAME	SIGNATURE	DATE
DRAWN	I.Agar		14.07.2023

Tiptiptap OÜ

Product code: LM225-1

DESCRIPTION: Play centre Hanna

A4

WEIGHT: | SCALE: 1:13 | SHEET 42 OF 55

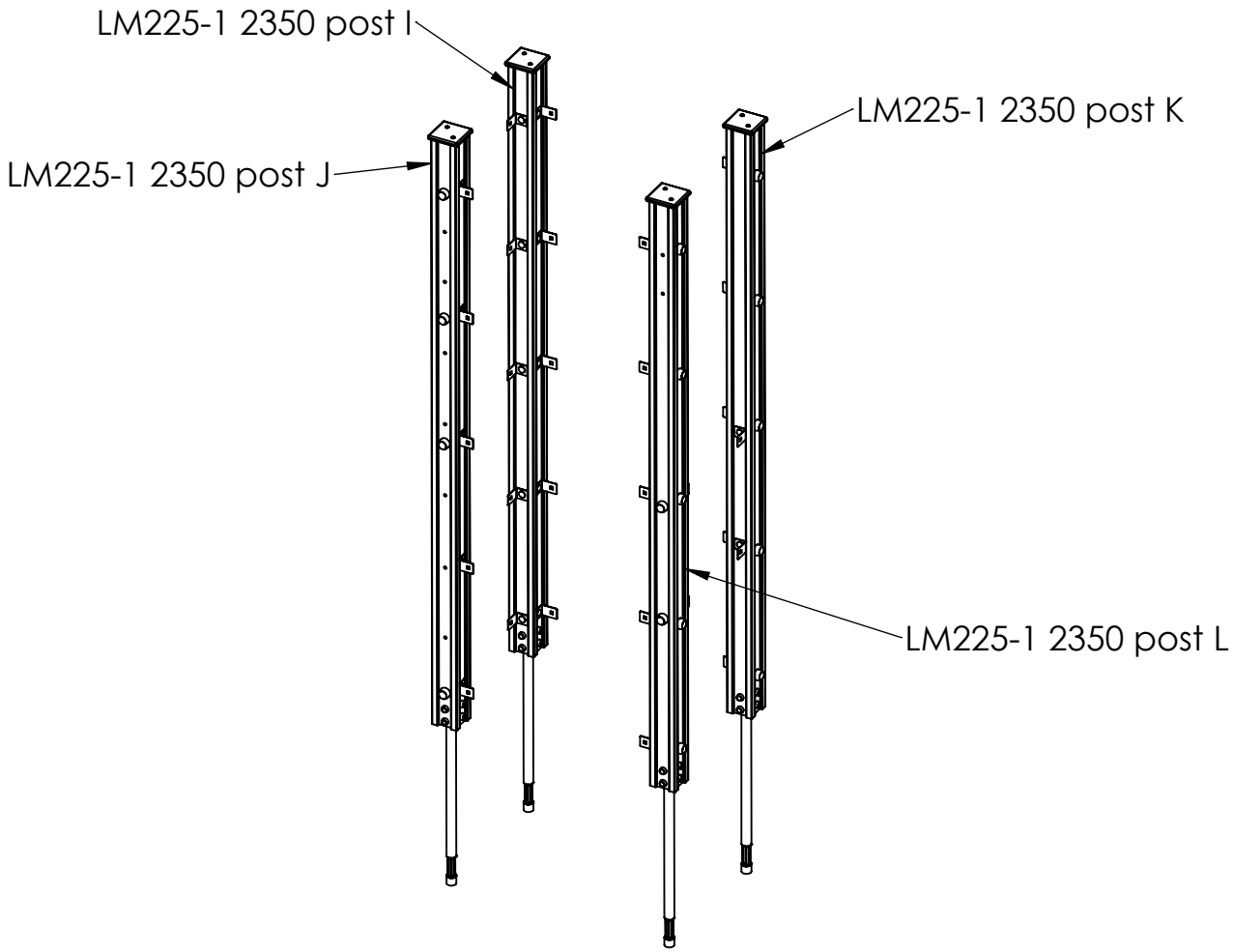

UNLESS OTHERWISE SPECIFIED:
DIMENSIONS ARE IN MILLIMETERS
WEIGHT ARE IN KILOGRAMM

	NAME	SIGNATURE	DATE
DRAWN	I.Agar		14.07.2023

Tiptiptap OÜ

Product code: LM225-1

DESCRIPTION: Play centre Hanna

A4

WEIGHT: | SCALE: 1:25 | SHEET 43 OF 55

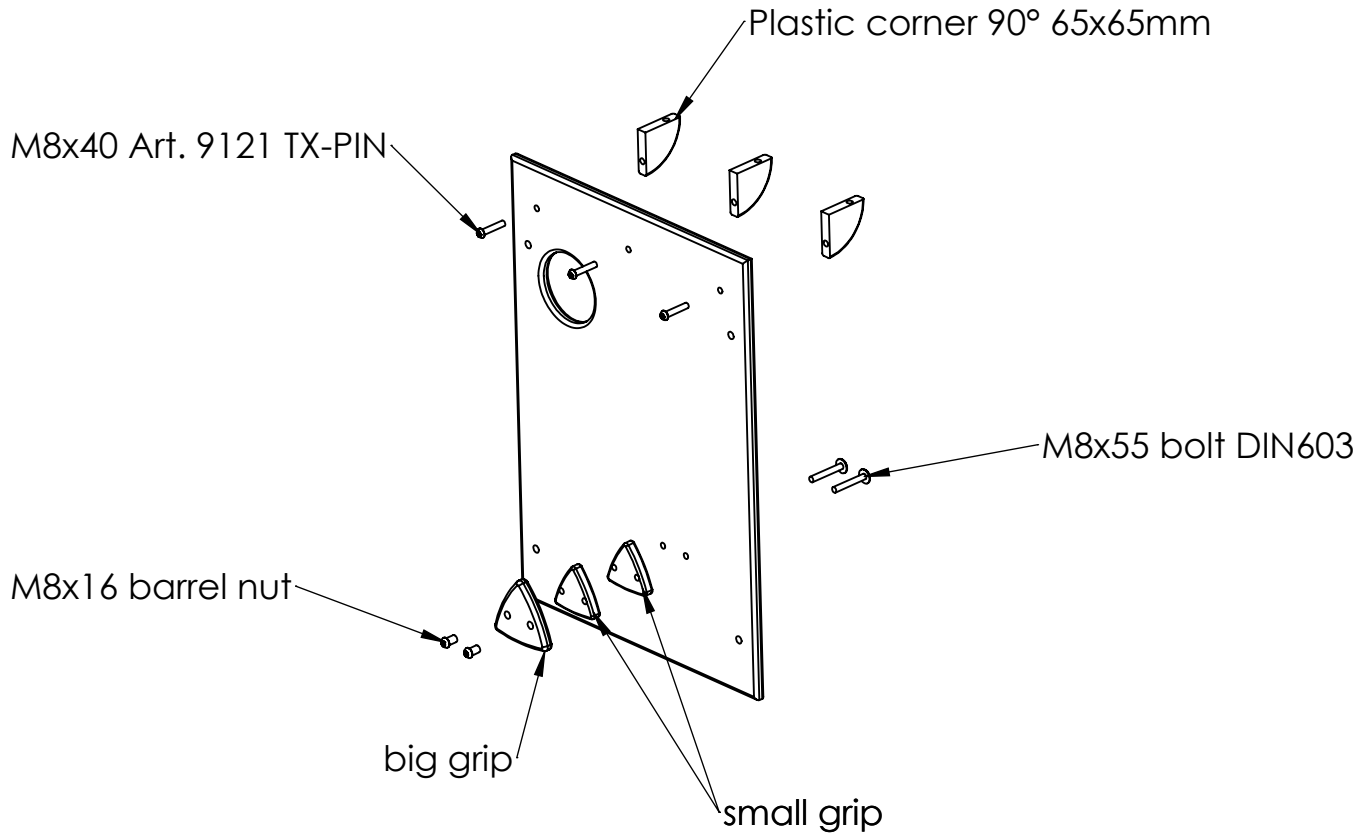

UNLESS OTHERWISE SPECIFIED:
DIMENSIONS ARE IN MILLIMETERS
WEIGHT ARE IN KILOGRAMM

	NAME	SIGNATURE	DATE
DRAWN	I.Agar		14.07.2023

Tiptiptap OÜ

Product code: LM225-1

DESCRIPTION: Play centre Hanna

A4

WEIGHT:

SCALE: 1:10

SHEET 44 OF 55

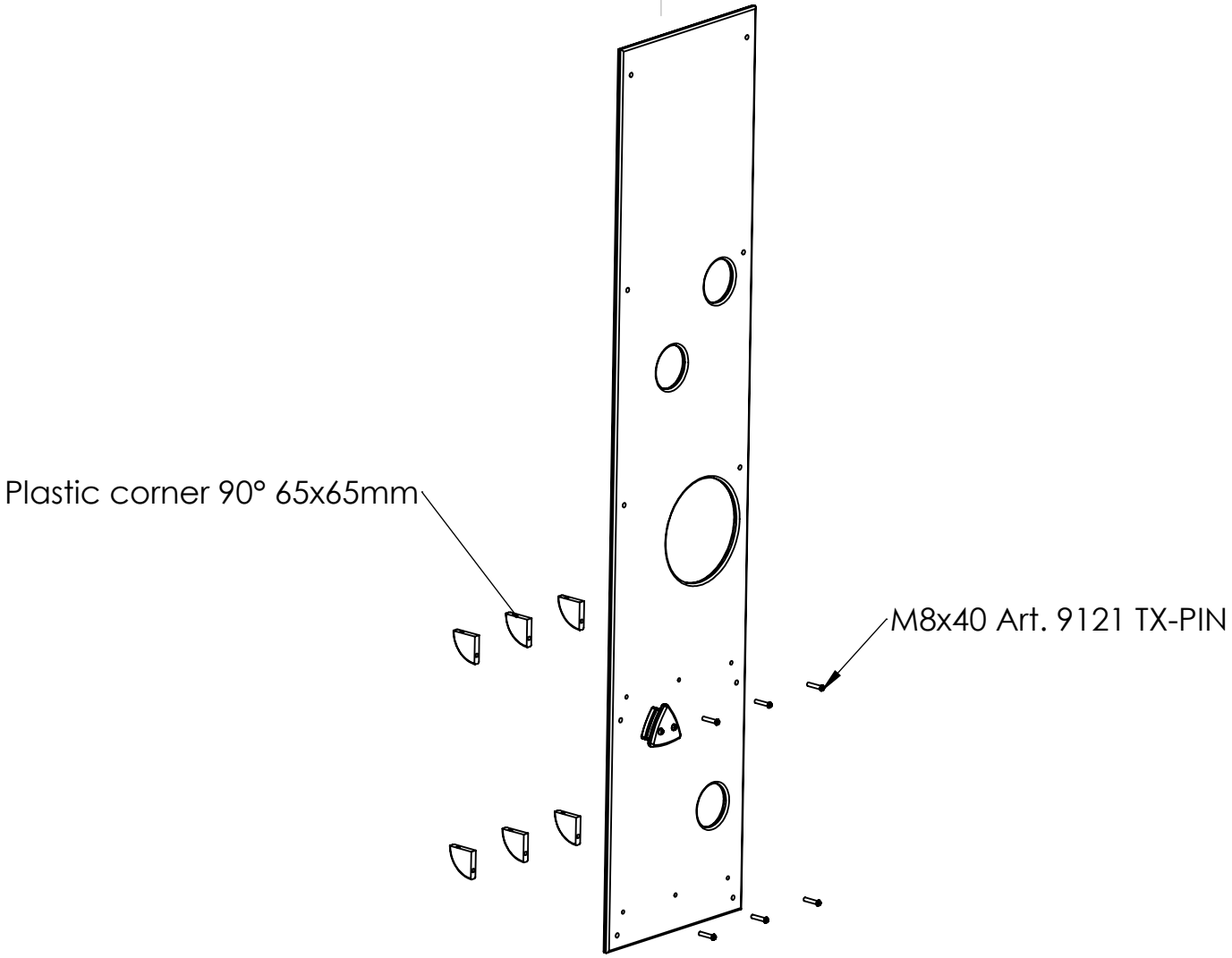

UNLESS OTHERWISE SPECIFIED:
DIMENSIONS ARE IN MILLIMETERS
WEIGHT ARE IN KILOGRAMM

	NAME	SIGNATURE	DATE
DRAWN	I.Agar		14.07.2023

Tiptiptap OÜ

Product code: LM225-1

DESCRIPTION: Play centre Hanna

A4

WEIGHT:

SCALE: 1:15

SHEET 45 OF 55

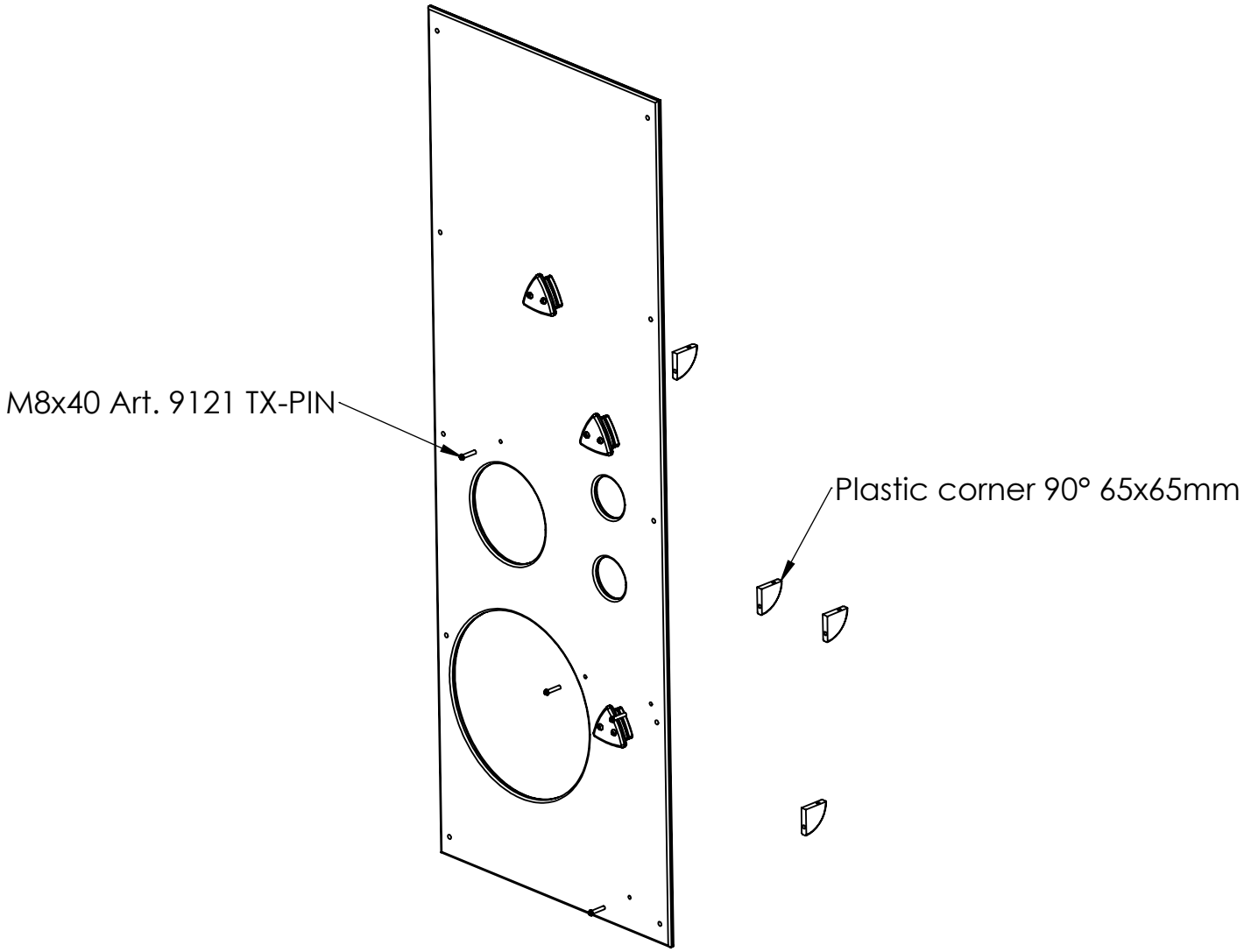

UNLESS OTHERWISE SPECIFIED:
DIMENSIONS ARE IN MILLIMETERS
WEIGHT ARE IN KILOGRAMM

	NAME	SIGNATURE	DATE
DRAWN	I.Agar		14.07.2023

Tiptiptap OÜ

Product code: LM225-1

DESCRIPTION: Play centre Hanna

A4

WEIGHT:

SCALE: 1:15

SHEET 46 OF 55

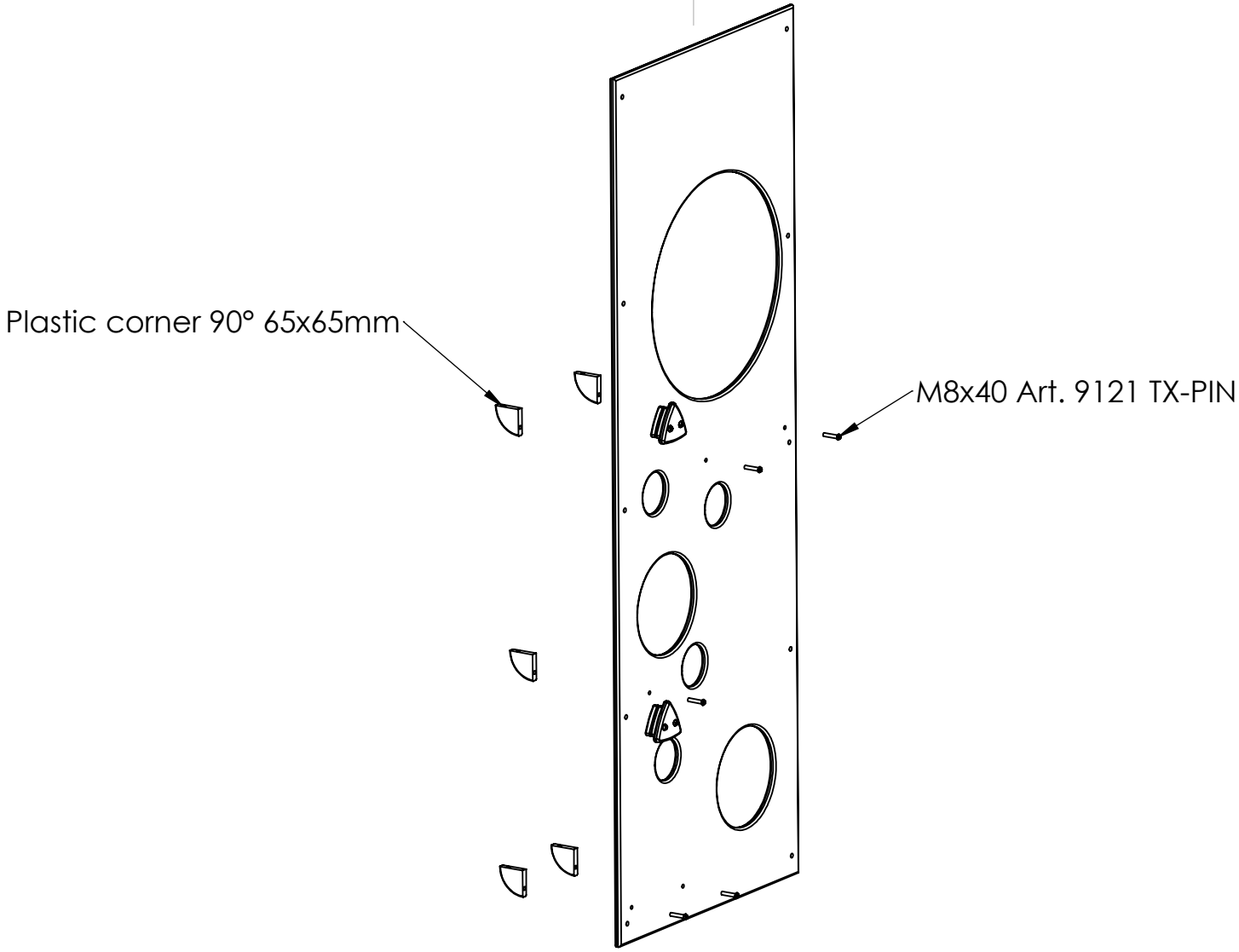

UNLESS OTHERWISE SPECIFIED:
DIMENSIONS ARE IN MILLIMETERS
WEIGHT ARE IN KILOGRAMM

	NAME	SIGNATURE	DATE
DRAWN	I.Agar		14.07.2023

Tiptiptap OÜ

Product code: LM225-1

DESCRIPTION: Play centre Hanna

A4

WEIGHT:

SCALE: 1:15

SHEET 47 OF 55

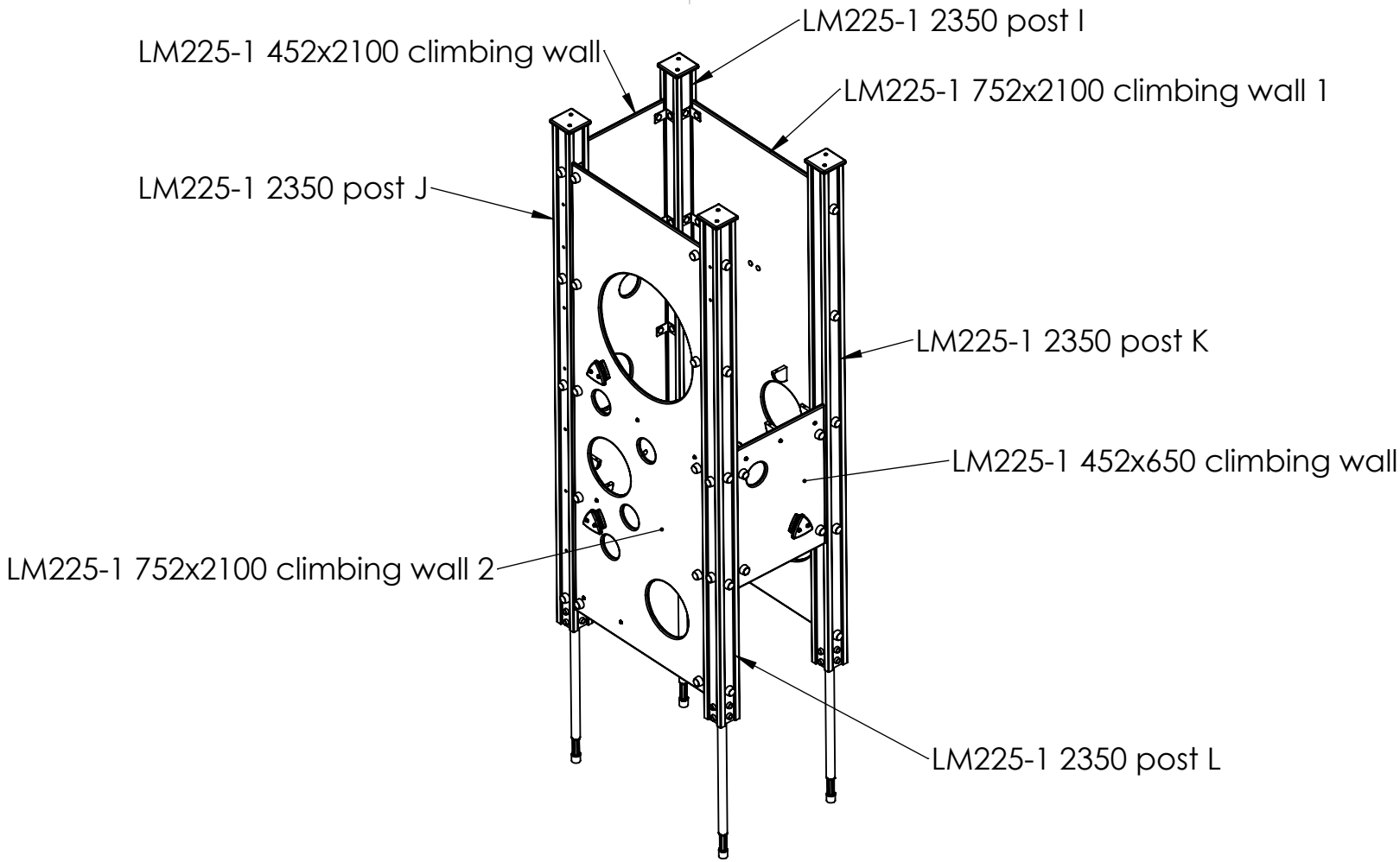

UNLESS OTHERWISE SPECIFIED:
DIMENSIONS ARE IN MILLIMETERS
WEIGHT ARE IN KILOGRAMM

	NAME	SIGNATURE	DATE
DRAWN	I.Agar		14.07.2023

Tiptiptap OÜ

Product code: LM225-1

DESCRIPTION: Play centre Hanna

A4

WEIGHT: | SCALE: 1:25 | SHEET 48 OF 55

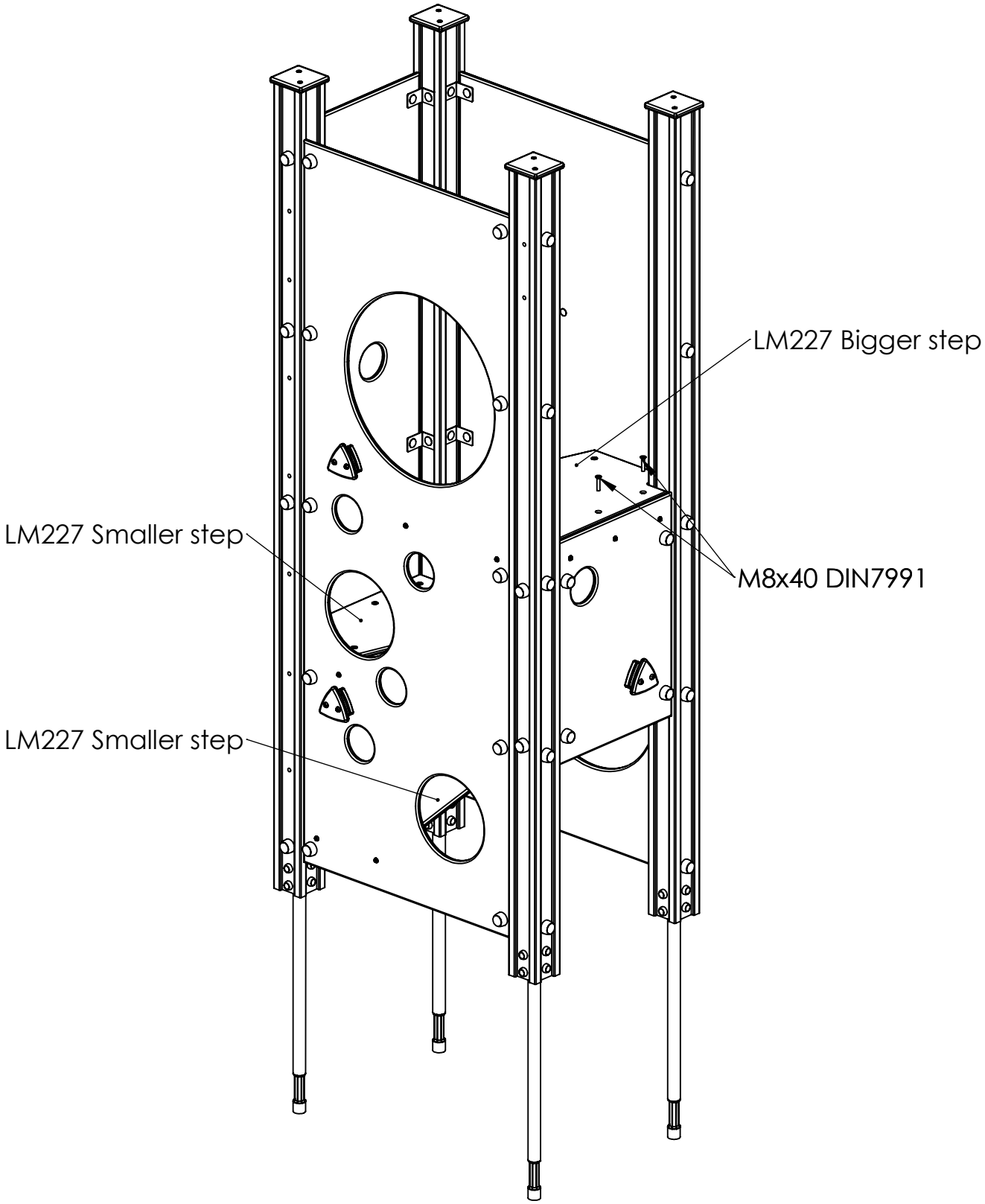

UNLESS OTHERWISE SPECIFIED:
DIMENSIONS ARE IN MILLIMETERS
WEIGHT ARE IN KILOGRAMM

	NAME	SIGNATURE	DATE
DRAWN	I.Agar		14.07.2023

Tiptiptap OÜ

Product code: LM225-1

DESCRIPTION: Play centre Hanna

A4

WEIGHT: | SCALE: 1:15 | SHEET 49 OF 55

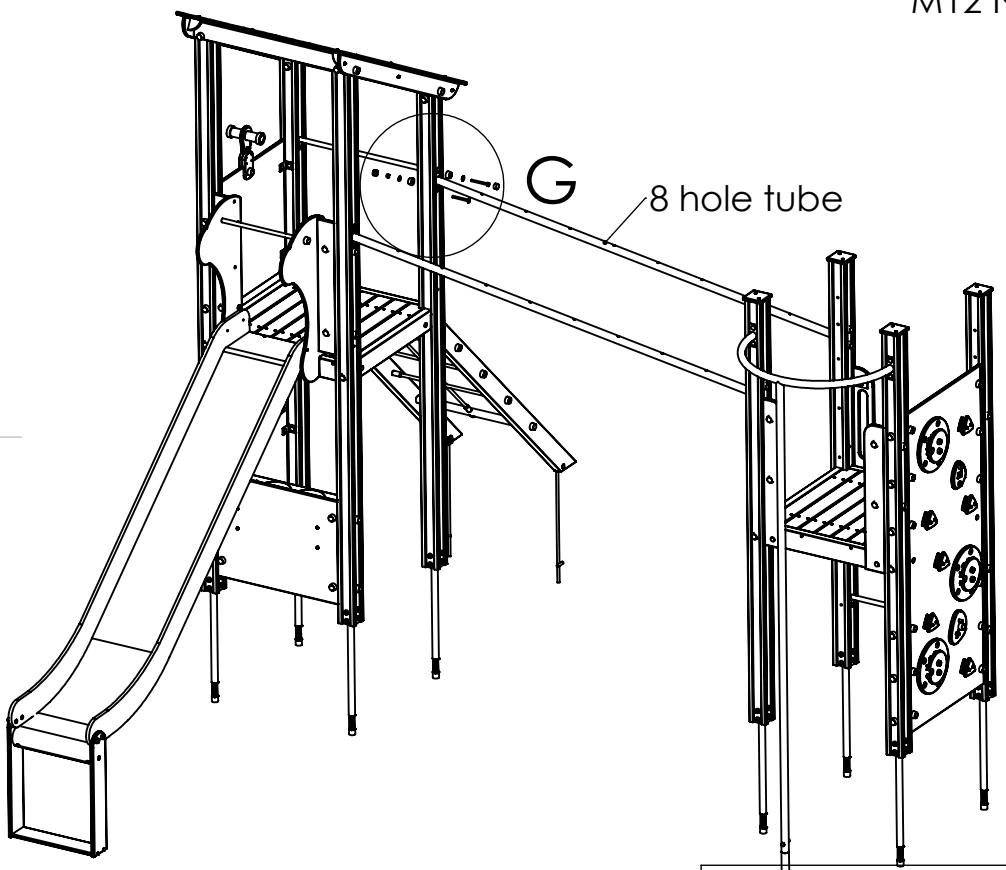

DETAIL G

SCALE 1 : 12

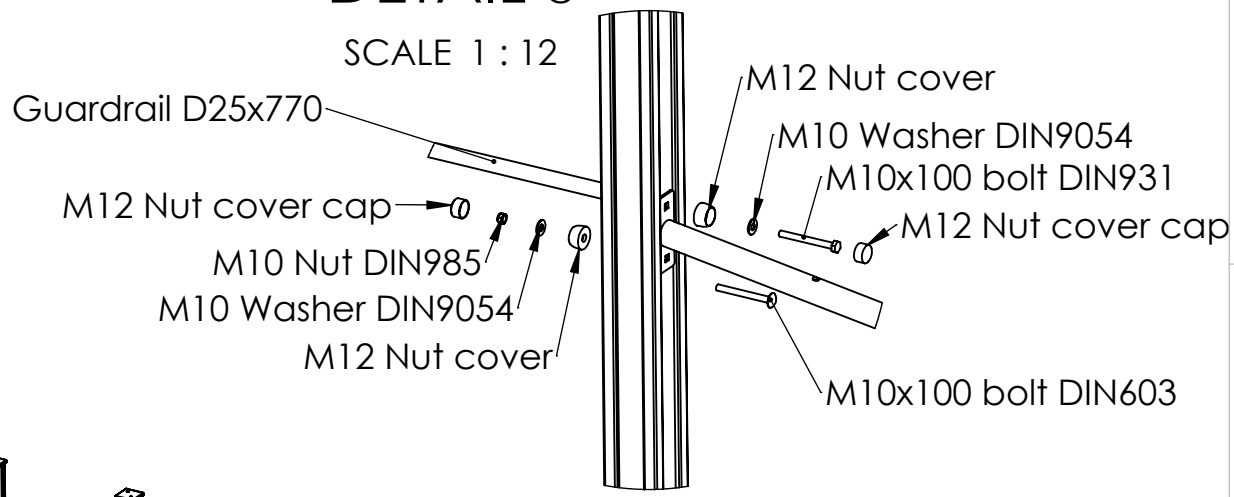

UNLESS OTHERWISE SPECIFIED:
DIMENSIONS ARE IN MILLIMETERS
WEIGHT ARE IN KILOGRAMM

	NAME	SIGNATURE	DATE
DRAWN	I.Agar		14.07.2023

Tiptiptap OÜ

Product code: LM225-1

DESCRIPTION: Play centre Hanna

A4

WEIGHT: | SCALE: 1:40 | SHEET 50 OF 55

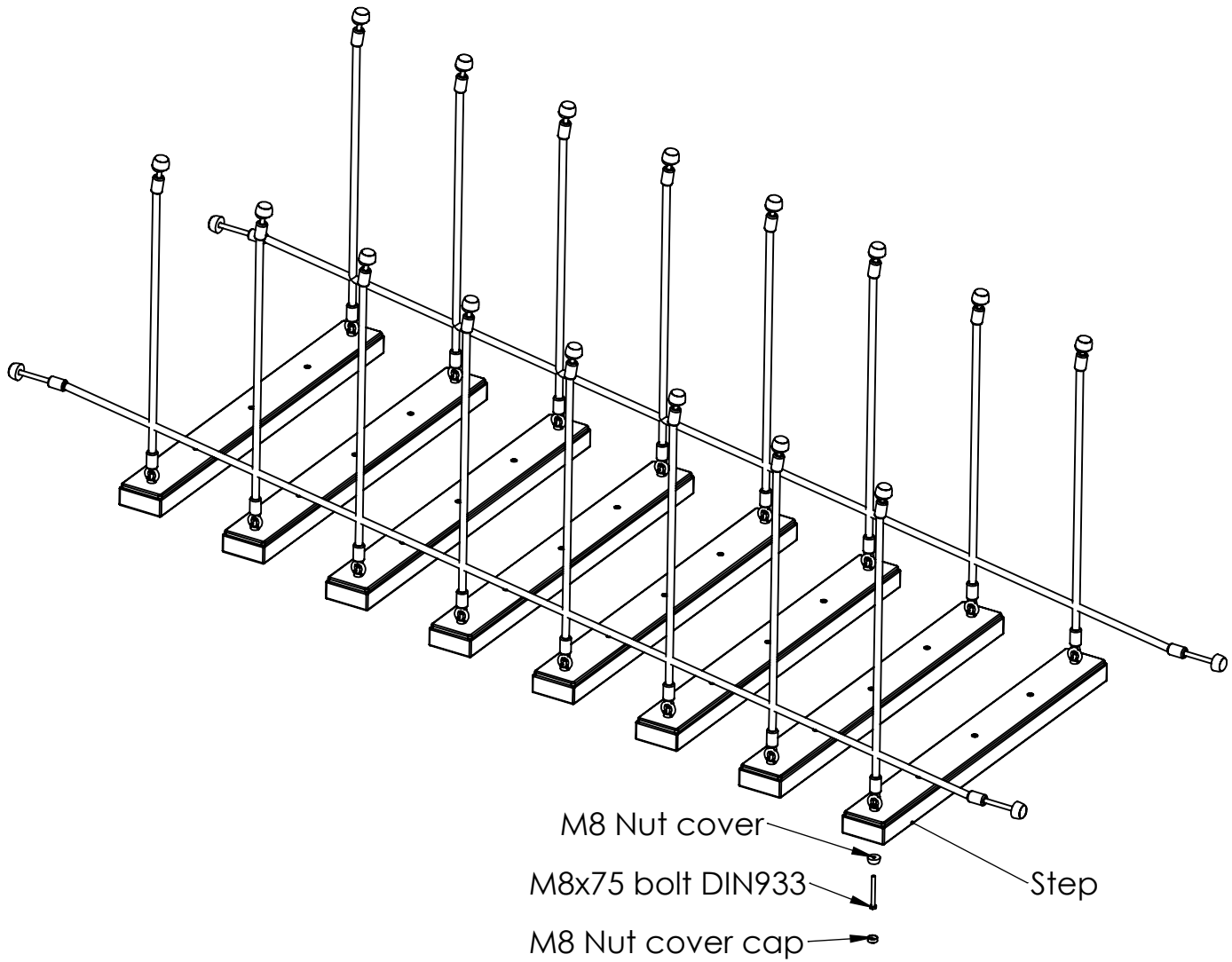

UNLESS OTHERWISE SPECIFIED:
DIMENSIONS ARE IN MILLIMETERS
WEIGHT ARE IN KILOGRAMM

	NAME	SIGNATURE	DATE
DRAWN	I.Agar		14.07.2023

Tiptiptap OÜ

Product code: LM225-1

DESCRIPTION: Play centre Hanna

A4

WEIGHT:

SCALE: 1:15

SHEET 51 OF 55

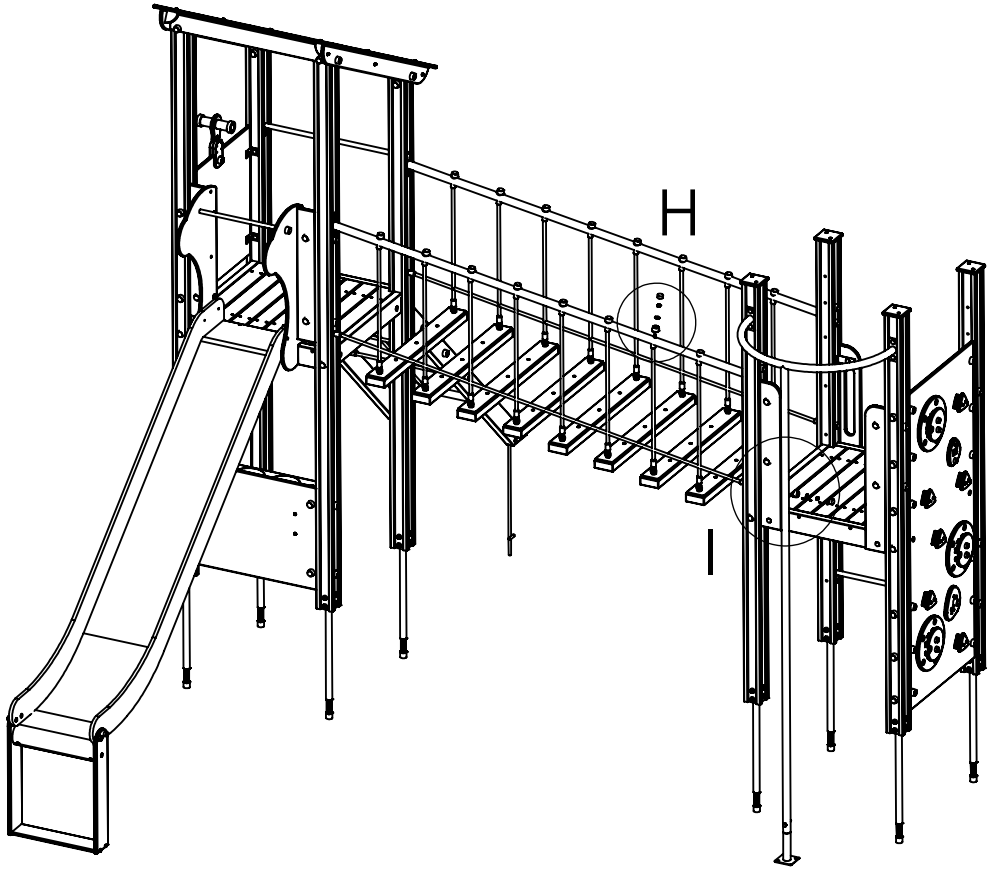

DETAIL I

SCALE 1 : 10

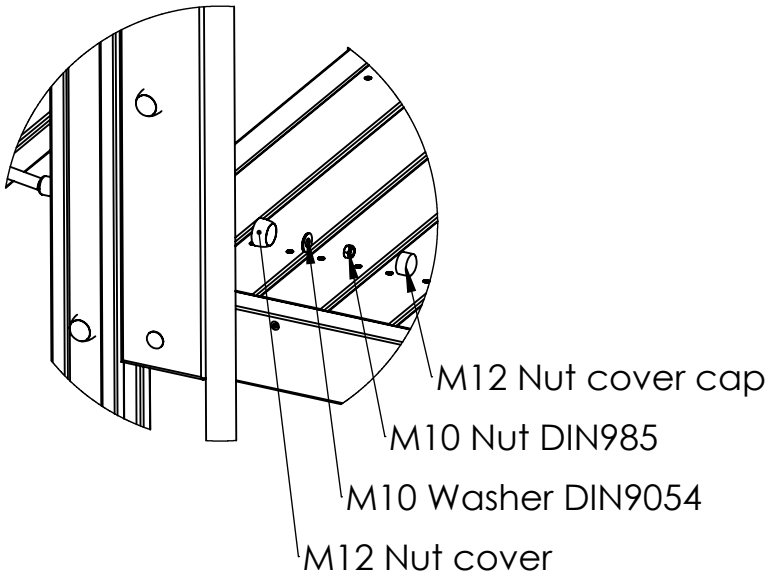

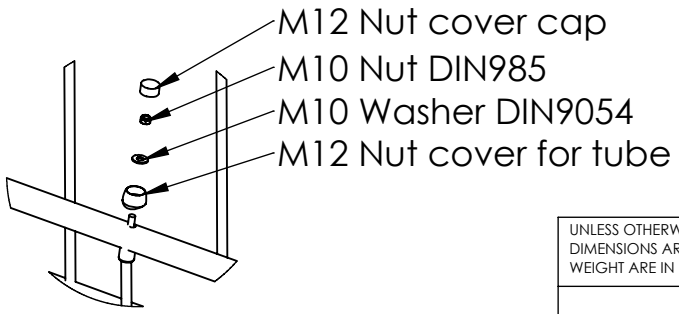

DETAIL H

SCALE 1 : 12

UNLESS OTHERWISE SPECIFIED:
DIMENSIONS ARE IN MILLIMETERS
WEIGHT ARE IN KILOGRAMM

	NAME	SIGNATURE	DATE
DRAWN	I.Agar		14.07.2023

Tiptiptap OÜ

Product code: LM225-1

DESCRIPTION: Play centre Hanna

A4

WEIGHT:

SCALE: 1:40

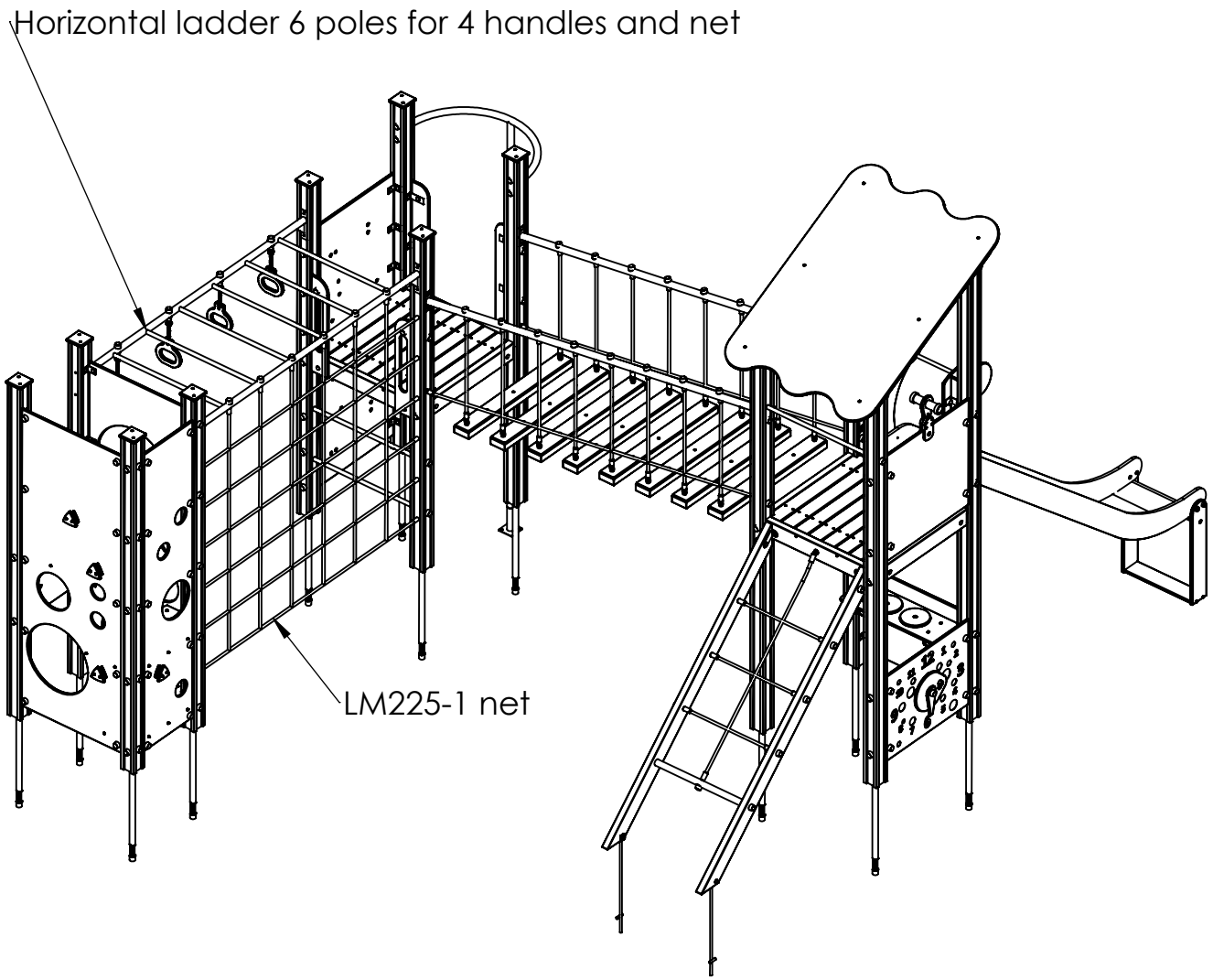

UNLESS OTHERWISE SPECIFIED:
DIMENSIONS ARE IN MILLIMETERS
WEIGHT ARE IN KILOGRAMM

	NAME	SIGNATURE	DATE
DRAWN	I.Agar		14.07.2023

Tiptiptap OÜ

Product code: LM225-1

DESCRIPTION: Play centre Hanna

A4

WEIGHT:

SCALE: 1:40

SHEET 53 OF 55

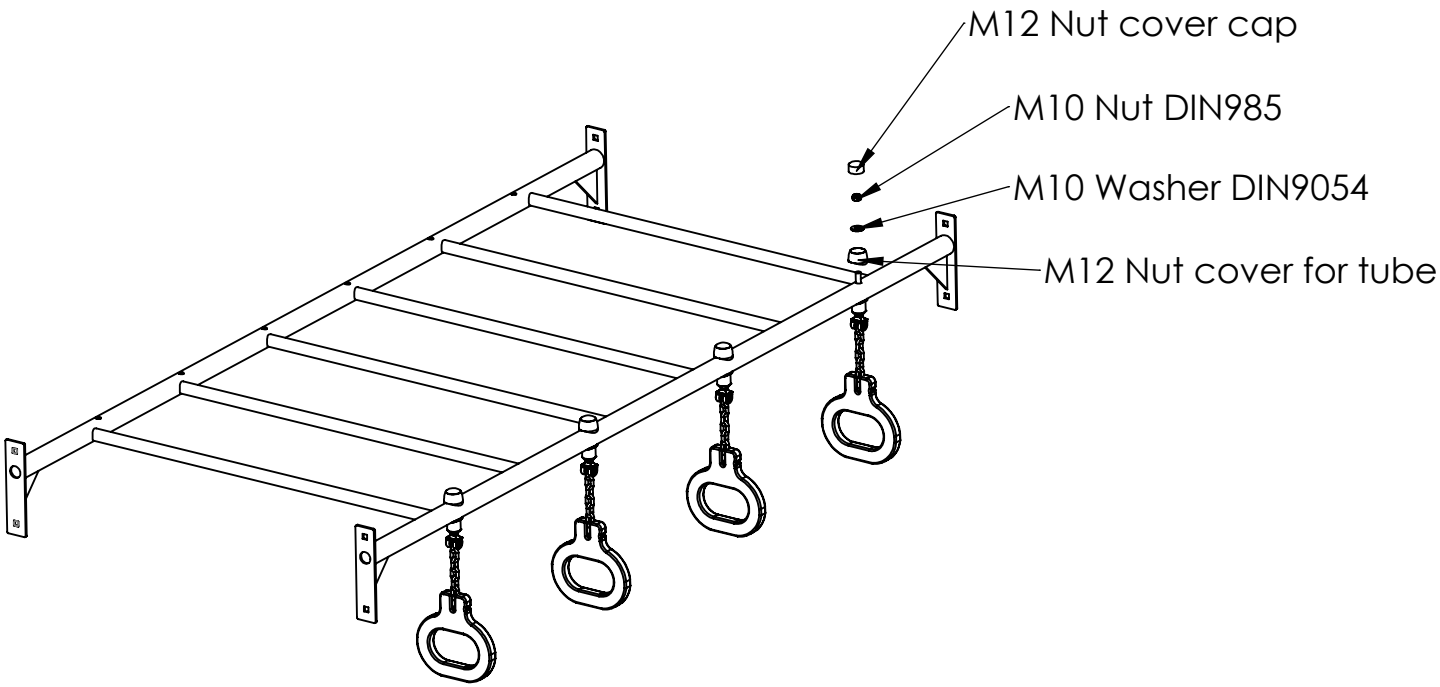

UNLESS OTHERWISE SPECIFIED:
DIMENSIONS ARE IN MILLIMETERS
WEIGHT ARE IN KILOGRAMM

	NAME	SIGNATURE	DATE
DRAWN	I.Agar		14.07.2023

Tiptiptap OÜ

Product code: LM225-1

DESCRIPTION: Play centre Hanna

A4

WEIGHT:

SCALE: 1:15

SHEET 54 OF 55

Net and net tube to post assembly

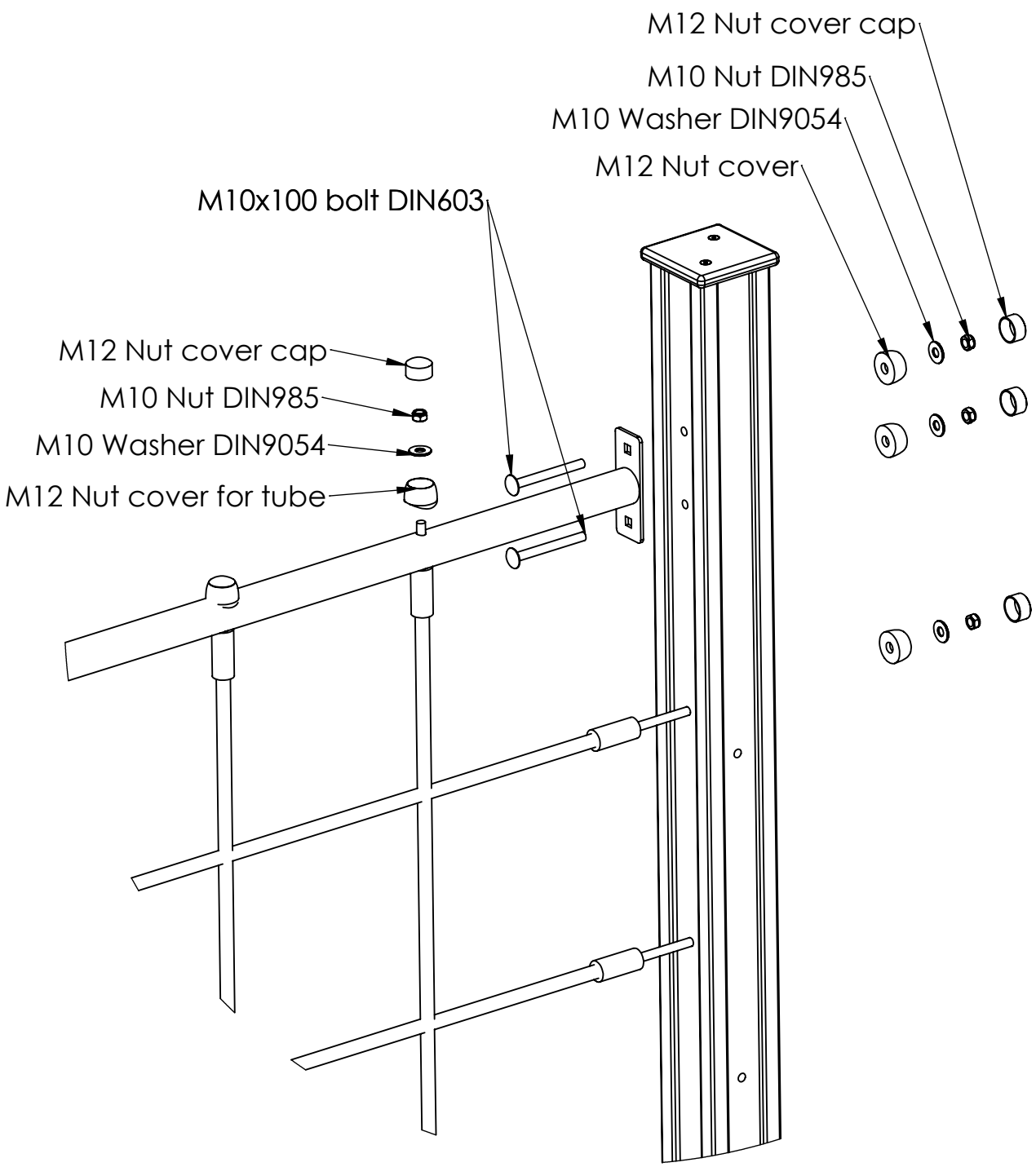

Nets and ropes have to be assembled after the foundation concrete has hardened!!!

UNLESS OTHERWISE SPECIFIED: DIMENSIONS ARE IN MILLIMETERS WEIGHT ARE IN KILOGRAMM				Product code: LM225-1	
	NAME	SIGNATURE	DATE		
DRAWN	I.Agar		14.07.2023	DESCRIPTION: Play centre Hanna	
Tiptiptap OÜ					A4
				WEIGHT:	SCALE: 1:30	SHEET 55 OF 55